Art. 760086

Assembly & Operating Instructions

for

Temporary Suspended Platform System

Model MHB

Conform to
EN-1808 – March 1999
Machinery Directive 98/37 EC

Copyright© Altrex B.V.
P.O. BOX 30160, 8003 CD Zwolle
Mindenstraat 7, 8028 PK Zwolle
The Netherlands
Tel.: +31 (38) 4557 700
Fax: +31 (38) 4557 711
e-mail: sales@altrex.com
website: www.altrex.com

Art. 760086-1.0

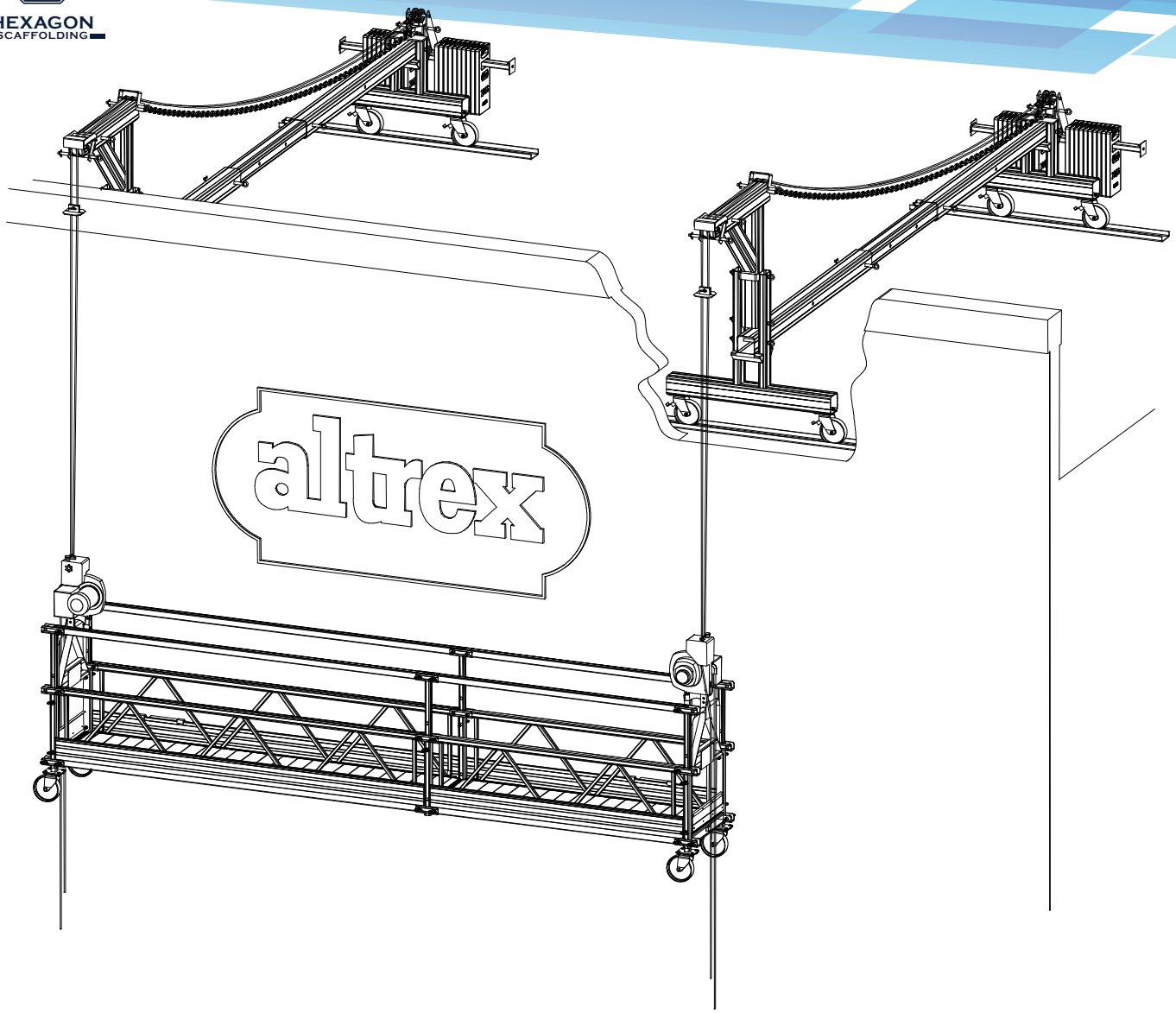

A trained person must always supervise the installation procedure.
Local safety regulations and codes must be understood and followed.
All persons operating this equipment must read and completely understand this manual.
Any operation in violation of these instructions is at the operator's own risk.
Keep this manual with the equipment at all times!
This document will supersede previous versions.

Copyright © 2005 by ALTREX B.V.
Zwolle / the Netherlands
Date: july 2005
Version: 1.0

All dimensions and data are indicative only. Specifications are subject to alteration without notice.
The user must ensure that the equipment complies with local rules and regulations.

Preface

This document is meant for owners, assemblers and users of the Altrex Modular Suspended Platform System. It should yield safe use of the Modular Suspended Platform System, as a complete installation, consisting of roof-suspensions, hoists, stirrups and modular platforms. Base for this manual is the European Standard EN 1808 and Altrex own interpretation of safe use in practice.

This document contains general information, assembly instructions and user's manuals of Altrex MHB suspended platform equipment. This document will be provided by your Altrex distibutor and must be available to his customers. Contact your distributor when more manuals are required.

CONTENTS:

I DEFINITIONS

II SAFETY GUIDELINES TO PREVENT ACCIDENTS
- II.1 General
  - II.1.1 Description
  - II.1.2 General use
  - II.1.3 Conditions of use
  - II.1.4 Manual
- II.2 Use
  - II.2.1 Do
  - II.2.2 Do not
  - II.2.3 Terminating use
  - II.2.4 Relocating

III SUSPENDED PLATFORM SYSTEM "MODEL MHB"
- III.1 General
  - III.1.1 Description
  - III.1.2 Use
- III.2 Parts identification
- III.3 Required components, parts list and partweight for standard platform MHB
- III.4 Dimensions
- III.5 Load capacity and configuration tabels
  - III.5.1 Standard modular platform system model MHB with END STIRRUPS"
  - III.5.2 Standard modular platform system model MHB with WALK-THROUGH-STIRRUPS"
- III.6 Assembly

IV STIRRUPS
- IV.1 General
- IV.2 Types of stirrups
- IV.3 End stirrups
  - IV.3.1 End stirrup for Astro 600kg, Astro 800kg, Titan 500kg and Titan 650kg
- IV.4 Walkthrough-stirrups
  - IV.4.1 Walkthrough-stirrup for Astro 600kg and Astro 800kg
  - IV.4.2 Walkthrough-stirrup for Astro 600kg, Astro 800kg, Titan 500kg and Titan 650kg

V HOISTS
- V.1 Astro hoist E86 AND E89
  - V.1.1 General
  - V.1.2 Central control box
  - V.1.3 Installation
  - V.1.4 Maintenance
  - V.1.5 Troubleshooting
  - V.1.6 Safety devices
  - V.1.7 Steelwire rope
  - V.1.8 Precautions
  - V.1.9 Daily checklist
- V.2 Titan Hoist
  - V.2.1 General
  - V.2.2 Titan installation
  - V.2.3 Titan maintenance
  - V.2.4 Troubleshooting
  - V.2.5 Titan safety devices
  - V.2.6 Titan steel wire rope
  - V.2.7 Precautions
  - V.2.8 Titan daily checklist

VI ROOF SUSPENSIONS

VI.1 General
- VI.1.1 Description of ROOFBEAMS
- VI.1.2 Use of ROOFBEAMS
- VI.1.3 Loadcapacity and configuration tables

VI.2 Roofbeam ADB 400 - 600kg low
- VI.2.1 Parts identification
- VI.2.2 Dimensions

VI.3 Roofbeam ADB 400 - 600kg high
- VI.3.1 Parts identification
- VI.3.2 Dimensions

VI.4 Roofbeam ADB 600 - 800kg low
- VI.4.1 Parts identification
- VI.4.2 Dimensions

VI.5 Roofbeam ADB 600 - 800kg high
- VI.5.1 Parts identification
- VI.5.2 Dimensions

VI.6 Safe working, assembly and use
- VI.6.1 Safe working on roofs
- VI.6.2 Assembly
- VI.6.3 Terminating use, relocation and disassembly

VII CORNER SECTIONS

VII.1 General

VII.2 Parts identification
- VII.2.1 Adjustable cornersection
- VII.2.2 Fixed corner sections

VII.3 Dimensions
- VII.3.1 Adjustable cornersection
- VII.3.2 Fixed cornersection

VII.4 Loadcapacity and configuration tables
- VII.4.1 Loadcapacity
- VII.4.2 Configuration tables

VII.5 Assembly
- VII.5.1 Sequence of assembly
- VII.5.2 Check before use
- VII.5.3 Warning

VIII DOUBLE DECK MHB

VIII.1 General
- VIII.1.1 Description
- VIII.1.2 Use

VIII.2 Dimensions

VIII.3 Parts identification

VIII.4 Assembly

VIII.5 Loadcapacity and configuration tables
- VIII.5.1 MHB Double Deck with end stirrup
- VIII.5.2 MHB Double Deck with walktrough stirrup

IX CHECKLIST TEMPORARY SUSPENDED PLATFORM SYSTEMS (MHB)

DEFINITIONS

- **Suspended platform:**
  the workplatform as an element of a temporary suspended platform system

- **Temporary suspended platform system (TSP):**
  system of workplatform, hoists, central control box, cables and roofsuspension that can be built from knock-down elements to provide temporary access to a building facade.

- **Hoist:**
  electrical device that is capable of climbing or descending a steel wire rope, while carrying a load, like e.g. a work platform

- **Central control box (CCB):**
  controlpanel from which the hoists can be operated

- **Roof suspension:**
  A construction meant for the suspension of a workplatform, mounted at roof level

- **Roofbeam:**
  specific type of roof suspension, basicly a long beam with one outrigging end placed on two support stands

- **Suspension rope:**
  steel cable, mounted on the roof suspension, on which the hoist climbs or descends

- **Stirrup:**
  construction to provide a suitable connection between a work platform and a specific type of hoist

- **End-stirrup**
  Stirrup that is located at the very end of a workplatform, also functioning as an end-guardrail

- **Walkthrough-stirrup**
  Stirrup that is located at a certain distance from the outer end of a platform bywhich a cantilevered section of platform occurs.

- **Work Load Limit:**
  (= WLL) Nominal capacity of a hoist. The loadcapacity of the workplatform is also based upon the WLL of a hoist, just like the capacity and required counterweight of a roofbeam.

- **Load capacity and configuration table:**
  List of allowed platformlengths that, in combination with hoistcapacity and type of stirrup, yields a maximum loadability.

- **Securable quickpin**
  Main device to connect the knock-down elements of the suspended platform equipment

II SAFETY GUIDELINES TO PREVENT ACCIDENTS

II.1 *General*

DANGER!	Don't save on safety, do not mix and match!
WARNING!	Do not integrate other than original MHB platform components!
CAUTION!	Remember safety is the responsibility of both … you and the operator!

Severe injury or death can result from improper assembly or use of the TEMPORARY SUSPENDED PLATFORM SYSTEM (MHB).

All suspended platform systems must be assembled as detailed in chapter III.5 "load capacity and configuration tables".

II.1.1 Description

- The temporary suspended platform system is designed according to the European Standard EN1808 and is in accordance with the demands of machine instructions and conform CE.
- The installation includes the suspended platform, stirrups, the electro mechanical hoists and its' safety devices and roof beams.
- The installation is applied in construction, inspection and maintenance of façades, chimneys, towers, etc.
- The installation may not be used for activities in silos, unless a number of conditions are met.
  Please contact your supplier for further details.
- For technical specifications of the installation see next pages.
- The installation is not meant to be used as an elevator for persons or goods.

II.1.2 General use

- The hoists are operated with the central control box on the MHB platform.
- The power supply cable must have a strain relief.
- The hoists can be operated in the following ways:

- UP / DOWN	Hoists rise / descend at the same time
- Choice switch LEFT / RIGHT	In the position LEFT or RIGHT, only one hoist at a time will be operated when using the UP / DOWN switch. A possible platform slope may be corrected that way.

The electrical diagram is pictured on the inside of the lid of the central control box.

The MHB may only rise and descend vertically. The MHB must be kept in a horizontal position while rising, descending and in operational position. See section V for operating of the hoists.

- In case of emergency the main power supply can be interrupted with the EMERGENCY - OFF - button.
- A power point is available coming from the central control box for the use of electrical hand tools. Only grounded or double insulated electrical equipment may be used.
- Be aware that these safety guidelines are not all inclusive. Proper training for all individuals that assemble, re-assemble, dismantle or use this equipment is mandatory.
- The platform shall be assembled and used only by trained and fit persons of at least 18 years old.
- The platform is intended for horizontal position of the deck. Limit switches activated by an eventual inclination of more than 14° in any direction will secure safe ope ration.

II.1.3 Conditions of use

- Only authorized, trained and physically fit persons may assemble and operate this equipment.
- Physical, environmental and operating conditions for the equipment:

- Temperature range	between -20℃ and +55℃
- Humidity range	between 30% and 95%
- Altitude above sea level	up to 1200 meter
- Contaminants	degree of protection IP 54
- Wind speed	wind force not exceeding 6 Beaufort (13.8 m/s)

- An earth leakage circuit breaker (ELCB) of 30 mA and an automatic fuse of sufficient amperage (type C) must be used at the power source.
- All electrical equipment should be grounded or double insulated and executed according the concerning regulations

II.1.4 Manual

- Use only the complete document “Altrex Assembly & Operating Instructions for Temporary Suspended Platform System, Model MHB”.
- Marked and only complete copies of the “Altrex Assembly & Operating Instructions for Temporary Suspended Platform System, Model MHB” are on request available at the supplier of your suspended platform system.
- Do not make incomplete copies of this manual by yourself.
- This document is restricted to the temporary suspended platform system manufactured by Altrex.
- Act according to this document.
- This document is to be kept with on the temporary suspended platform system.
- Additional copies of (warning) labels are available should the original labeling become damaged, obscured or removed. Contact your supplier.

II.2 *Use*

II.2.1 Do

- Before using the equipment, the operator(s) must:

  - read and fully understand the contents of this manual;
    (serious injuries to personnel may result if the instructions are not followed)

  - carry out a check and make sure that the equipment is safe and in perfect working condition;
    (When? After installation, daily and after every emergency-stop)

  - check the suspended platform system to ensure stability at all times;

  - check for obstructions along the travelpath of the platform;

  - make sure an area is available to allow personnel to get on and off the platform safely;

  - make sure the area around and below the platform system is closed or safe for passers-by.
    (E.g. barriers, roof protected walkways, etc.)

  - check all connections, hoists, roofbeams and counterweight

  - examine the installation according to the checklist, see section IX.

- Use gloves to avoid injuries while assembling or dismantling the suspended platform system.

- Only use original suspended platform system components of Altrex.

- Inspect components of the suspended platform system when received. Do not assemble or use a suspended platform system unless all components are present and fitted.

- Be sure to place quick-pins according to the assembly-instructions. Be sure that each quick-pin is locked.

- Use only hardware furnished by the hoist manufacturer.

- Guard rails must be used, extended to the proper height at all times.

- Keep platform deck free from debris (especially oil or grease, which can cause a slipping hazard) and keep the platform leveled at all times.

- Failures in the installation, especially in hoists, slack rope devices or wire ropes, should be reported to the responsible person immediately.

- In case of emergency one should always be able to contact someone on the ground (e.g. by mobile phone).

- The installation should be operated by 2 persons at least.

- Accessing and leaving the MHB is allowed on the ground only.

- Tools should be secured from falling.

- Consult the manual of the hoists in case of any faillure in its' functioning.

HEXAGON SCAFFOLDING

II.2.2 Do not

DANGER – metal conducts electricity. Do not ever use metal platforms near any electrical current. Contact the local electrical utility for recommendations.

Do not use the equipment as described in this manual for operation in silo's, shafts and underground access. Special precautions are required for these specific applications.

Do not weld anything to the component parts of this equipment.

Do not assemble or use platform unless all components are present and in use.

Do not use the platform if it is exposed to excessive heat (as in the case of a fire). Remove platform from service. (Structural strength may be affected)

Do not use acids or other corrosive substances that can seriously affect the strength of aluminum. Should such substances come in contact with this platform, they must be immediately cleaned from the equipment by flushing with water and neutralizing as quickly as possible. Remove all platform sections suspected or subjected to corrosive attack from service.

Do not modify this platform in any way! This platform has been designed, engineered, manufactured and tested to exacting standards.

Do not apply impact loads to platform (dropping anything on the deck of the platform).

Do not overload or extend platform's total length or loading beyond loading and configuration tables, see section III.

HEXAGON SCAFFOLDING

II.2.3 Terminating use

In the following circumstances the installation should be put out of order and into parking mode immediately:

- generally whenever one of the conditions of use are not met
- if any of the system components do not operate properly or if any other circumstances may jeopardise safety - call your supervisor for assistance.
- wind force exceeding 6 Beaufort (13.8 m/s)
- approaching storm
- at the end of each working day

Parking mode = lower the MHB onto the ground.

- Lower the MHB onto the ground.
- When leaving the MHB, the power supply cable should be removed from the main power supply source.
- Make sure that the installation is safe against unauthorised persons.

II.2.4 Relocating

- Lower the MHB onto the ground
- Eject wire ropes from the hoist
- Move the MHB to the wanted position
- Move roofsuspensions to the corresponding new position. See section VI for relocating roofsuspensions.
- Once it is certain that roofsuspensions:
  - are in the right location,
  - have the same suspensionrope distance as the distance between the hoists,
  - have been installed properly,
  - have enough counterweight installed,
  - have their brakes applied,
  - have endstop limiters attached to the suspensionropes,

  the suspensionropes can be re-entered into the hoists, and the ropetensioning ballast weights can be mounted onto the suspensionropes, at a height of approximately 20cm above the ground.

III. TEMPORARY SUSPENDED PLATFORM SYSTEM "MODEL MHB"

III.1. *General*

III.1.1. Description

The Altrex MHB platform is a workplatform composed of single elements to create a temporary workarea, that can be suspended and lifted by hoists.

III.1.2. use

The Altrex MHB workplatform is meant to be used for "medium duty" jobs (<300kg/m²) such as finishing, building, inspection and maintenance on facades and ceilings of buildings, bridges and other structures.
Only the configurations indicated at the "**Load capacity and configuration tables**" in chapter III.5 may be used.

III.2. *Parts identification*

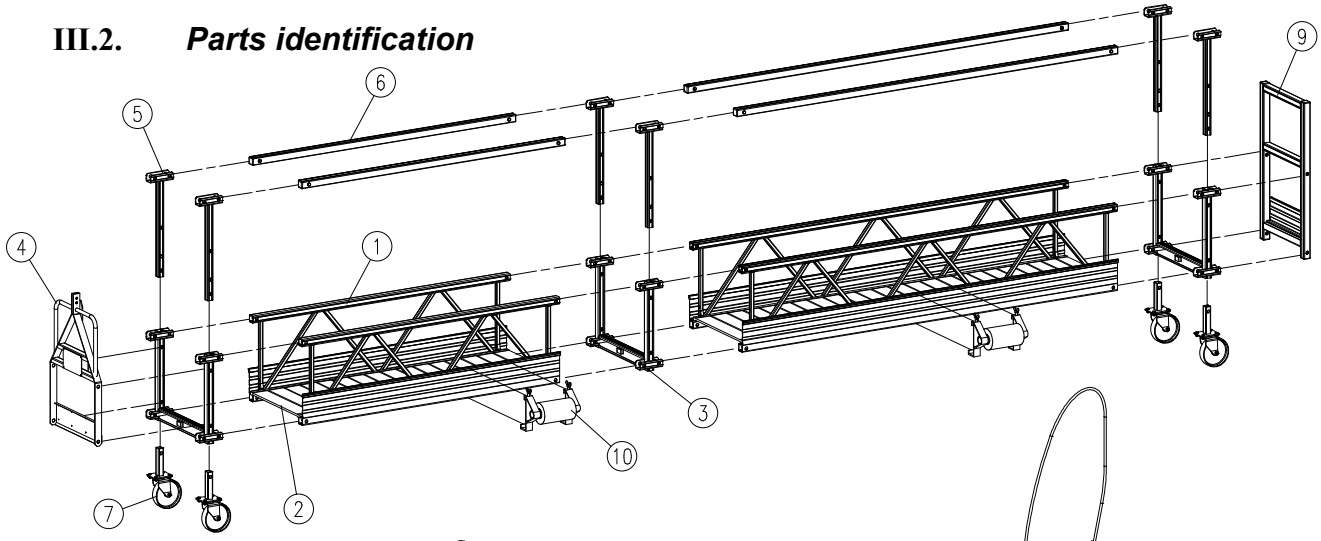

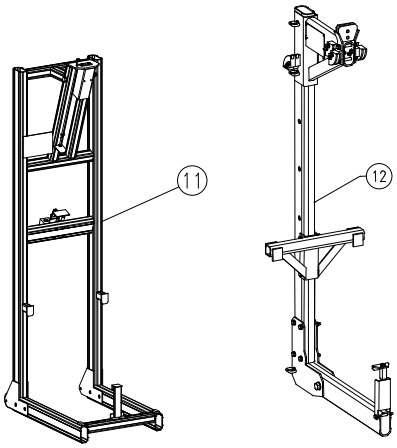

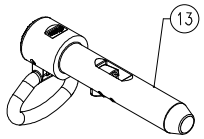

Pos.	Description	Part no.	Weight (kg)
1	Sideframe 0,5m	421005	3,1
	Sideframe 1m	421001	6,3
	Sideframe 2m	421002	9,9
	Sideframe 3m	421003	17,1
2	Aluminum deck 0,5m	422205 / 422905*	2,5 / 3,0*
	Aluminum deck 1m	422501 / 422910*	5,4 / 6,3*
	Aluminum deck 2m	422502 / 422920*	10,7 / 11,9*
	Aluminum deck 3m	422503 / 422930*	14,5 / 17,9*
3	U-frame	421501	4,9
4	End-stirrup	423020	13,6
5	Guardrail post	421513	0,9
6	Guardrail 0,5m	422005	0,5
	Guardrail 1m	422001	0,8
	Guardrail 2m	422002	1,6
	Guardrail 3m	422003	2,3
7	Castor wheel	423010	3,5
8	Quickpin	424001	0,3
9	End-guardrail	423072	3,5
10	Wall roller	423030	5,0
11	Walk-through-stirrup	423019	50
12	Walk-through-stirrup CE	423027	25
13	Quickpin pro	424031	0,4

*= For using at 2 sides.

III.3. *Required components, parts list and partweight for standard platform system MHB*

Part no	421001	421002	421003	422501 422910*	422502 422920*	422503 422930*	421501	421513	422001	422002	422003	423010	423030	423020	423072	423019 423027	424001 424031
Weight/ unit (kg)	6,3	9,9	17,1	5,4	10,7	14,5	5	0,8	0,8	1,6	2,3	3,5	5	13,6	3,5	50	0,3
Description	Sideframe 1m	Sideframe 2m	Sideframe 3m	Aluminum deck 1m	Aluminum deck 2m	Aluminum deck 3m	U-frame excl. Guard rail post	Guard rail post	Guard rail 1m	Guard rail 2m	Guard rail 3m	Castor wheel	Wall roller	End-stirrup	End guard rail	Walk-through-stirrup	Quick-pin
length (m)																	
1m	2			1			2	4	2			4	2	2	2	1/-	20
2m		2			1		2	4		2		4	2	2	2	1/2	20
3m			2			1	2	4			2	4	2	2	2	2	20
4m		4			2		3	6		4		4	2	2	2	2	34
5m		2	2		1	1	3	6		2	2	4	2	2	2	2	34
6m			4			2	3	6			4	4	2	2	2	2	34
7m		4	2		2	1	4	8		4	2	4	2	2	2	2	48
8m		2	4		1	2	4	8		2	4	4	2	2	2	2	48
9m			6			3	4	8			6	4	2	2	2	2	48
10m		4	4		2	2	5	10		4	4	4	2	2	2	2	62
11m		2	6		1	3	5	10		2	6	4	2	2	2	2	62
12m			8			4	5	10			8	4	2	2	2	2	62
13m		4	6		2	3	6	12		4	6	4	2	-	2	2	76
14m		2	8		1	4	6	12		2	8	4	2	-	2	2	76
15m			10			5	6	12			10	4	2	-	2	2	76
16m		4	8		2	4	7	14		4	8	4	2	-	2	2	90
17m		2	10		1	5	7	14		2	10	4	2	-	2	2	90
18m			12			6	7	14			12	4	2	-	2	2	90

*= For using at 2 sides.

NOTE: The here given parts lists are generating the least number of required parts. Other configurations are allowed aswel, e.g. a 6m MHB platform built with 2 x 3m sideframes can also be composed of 3 x 2m sideframes, which also generates a 6m MHB platform.

III.4. *Dimensions*

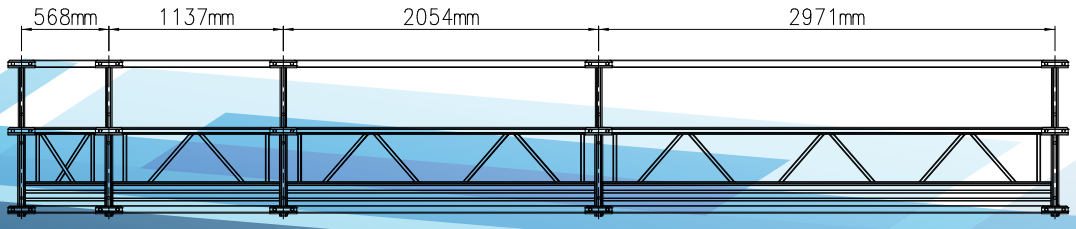

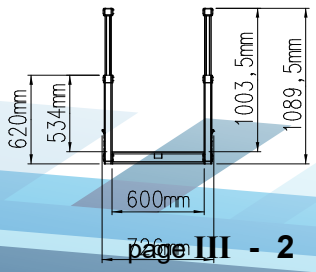

III.5. *Load capacity and configuration tables*

III.5.1. Standard temporary platform system model MHB with "END-STIRRUPS"

The column 500 kg is valid for the Titan 503
The column 600 kg is valid for the Titam 653
The column 650 kg is valid for the Astro E86-CTO
The column 800 kg is valid for the Astro E89-CTO

Zorg voor een symmetrische opbouw
Achte auf eine symmetrische Aufbau
Une construction symétrique est obligatoire
Make sure that the construction is built up

= 80kg

Belastbaarheid is inclusief personen
Belastbarkeit ist inklusif Personen
Chargabilité est inclusivement personnes
Loadability includes weight of persons

Work Load Limit (WLL)
Takel / Winde / Treuil / Hoist

03-06 / art 735570

Totale lengte / Gesamtlänge / Longeur Plateforme / Total length	Voorbeeld opbouw / Beispielaufbau / Example des Modules / Example arrangement	Eigen gewicht / Eigen Gewicht / Propre poids / Self weight	500kg MAX Belasting / Nutzlast / Charge / Load	500kg MAX. NO.	600kg Belasting / Nutzlast / Charge / Load	600kg MAX. NO.	650kg Belasting / Nutzlast / Charge / Load	650kg MAX. NO.	800kg Belasting / Nutzlast / Charge / Load	800kg MAX. NO.
[m]		[kg]	[kg]		[kg]		[kg]		[kg]	
2	2	251	360	2	360	2	360	2	360	2
3	3	270	540	3	540	3	540	3	540	3
4	2 2	291	720	4	720	4	720	4	720	4
5	3 2	311	560	5	900	5	900	5	900	5
6	3 3	330	480	5	640	6	920	6	1080	6
7	2 3 2	351	440	5	570	6	720	7	1260	7
8	3 2 3	371	410	4	530	6	650	7	930	8
9	3 3 3	390	390	4	490	5	610	7	700	8
10	3 2 2 3	411	370	4	470	5	560	6	560	6
11	3 2 3 3	431	350	3	450	5	460	5	460	5
12	3 3 3 3	451	340	3	390	4	390	4	390	4
-		-	-	-	-	-	-	-	-	-
-		-	-	-	-	-	-	-	-	-
-		-	-	-	-	-	-	-	-	-
-		-	-	-	-	-	-	-	-	-
-		-	-	-	-	-	-	-	-	-
-		-	-	-	-	-	-	-	-	-

Altrex B.V.
Postbus 30160
8003 CD Zwolle (NL)
www.altrex.nl

vloerdruk / Bodendruck / charge de surface / floorpressure
max300kg/m²

Voor takel type zie handleiding
Für Winde typ siehe die Anleitung
Pour treuil type voire manuel
For type of Hoist see the manual

Machine Richtlijn / Maschinenrichlinie / Directive sur les Machines / Machinery Directive
(98/37/EU)

Notified Body: 0547

Hangbrug met eindbeugels
Arbeitsbüne mit Endbügeln
Echafaudage volant avec etriers de suspension
Suspended platform with end-stirrups

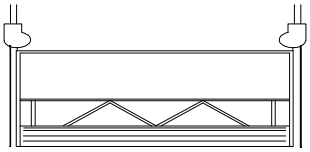

Neem contact op met uw Altrex dealer indien uw toe te passen configuratie niet vermeld wordt in deze tabel.
Konsultieren Sie ihren Altrex Lieferant wann die gewünschte Konstruktion nicht erwähnt ist in diese Tabelle.
Contacter votre distributeur dÄltrex quand votre configuration désire n"est pas méntionnee dans ce tableau.
Please be sure to consult with your Altrex supplier on factory approval for any configurations not listed in the table.

HEXAGON SCAFFOLDING

III.5.2. Standard temporary platform system MHB with "WALK-THROUGH-STIRRUP"

The column 500 kg is valid for the Titan 503
The column 600 kg is valid for the Titam 653
The column 650 kg is valid for the Astro E86-CTO
The column 800 kg is valid for the Astro E89-CTO

Zorg voor een symmetrische opbouw
Achte auf eine symmetrische Aufbau
Une construction symétrique est obligatoire
Make sure that the construction is built up

= 80kg

Belastbaarheid is inclusief personen
Belastbarkeit ist inklusif Personen
Chargabilité est inclusivement personnes
Loadability includes weight of persons

Work Load LIMIT (WLL)
Takel / Winde / Treuil / Hoist

Totale lengte / Gesamtlänge / Longeur Plateforme / Total length	Voorbeeld opbouw / Beispielaufbau / Example des Modules / Example arrangement	Kabelafstand / Tragseilabstand / Distance entr'axes étriers	Eigen gewicht / Eigen Gewicht / Propre poids / Self weight	500kg Belasting / Nutzlast / Charge / Load	500kg MAX. NO.	600kg Belasting / Nutzlast / Charge / Load	600kg MAX. NO.	650kg Belasting / Nutzlast / Charge / Load	650kg MAX. NO.	800kg Belasting / Nutzlast / Charge / Load	800kg MAX. NO.
[m]		[m]	[kg]	[kg]		[kg]		[kg]		[kg]	
2	2	2	335	360	2	360	2	360	2	360	2
3	3	2	357	540	3	540	3	540	3	540	3
4	2 2	3	378	720	4	720	4	720	4	720	4
5	3 2	4	400	470	5	740	5	900	5	900	5
6	3 3	5	421	420	4	560	6	760	6	1080	6
7	2 3 2	5 - 6	443	350	3	450	5	570	6	900	7
8	3 2 3	6 - 7	464	340	3	430	4	540	6	760	8
9	3 3 3	5 - 8	486	260	2	330	3	410	4	560	6
10	3 2 2 3	6 - 9	507	260	2	340	3	410	4	550	6
11	3 2 3 3	7 - 10	529	260	2	330	3	410	4	550	6
12	3 3 3 3	8 - 11	550	260	2	330	3	400	4	460	5
13	3 2 3 2 3	7 - 12	572			270	2	340	3	390	4
14	3 3 2 3 3	8 - 12	593			280	3	340	3	390	4
15	3 3 3 3 3	9 - 12	615			270	2	340	3	400	4
16	3 3 2 2 3 3	10 - 12	636			270	2	340	3	410	4
17	3 3 2 3 3 3	11 - 12	658			270	2	330	3	420	4
18	3 3 3 3 3 3	12	679			260	2	330	3	430	4

Altrex B.V.
Postbus 30160
8003 CD Zwolle (NL)
www.altrex.nl

vloerdruk / Bodendruck / charge de surface / floorpressure
max300kg/m²

Voor takel type zie handleiding
Für Winde typ siehe die Anleitung
Pour treuil type voire manuel
For type of Hoist see the manual

Machine Richtlijn / Maschinenrichlinie / Directive sur les Machines / Machinery Directive
(98/37/EU)

Notified Body: 0547

Hangbrug met doorloopbeugels
Arbeitsbühne mit Durchlaufbügeln
Echafaudage volant avec etriers de passage
Suspended platform with walk-through stirrups

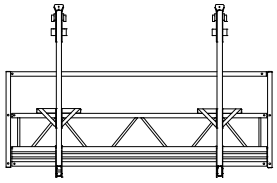

Neem contact op met uw Altrex dealer indien uw toe te passen configuratie niet vermeld wordt in deze tabel.
Konsultieren Sie ihren Altrex Lieferant wann die gewünschte Konstruktion nicht erwähnt ist in diese Tabelle.
Contacter votre distributeur d'Altrex quand votre configuration désire n'est pas méntionnee dans ce tableau.
Please be sure to consult with your Altrex supplier on factory approval for any configurations not listed in the table.

02-06 / art.735535

III.6. Assembly

1. Fit the side frames into the U-frames with quickpins. Repeat until the desired platform length is reached.

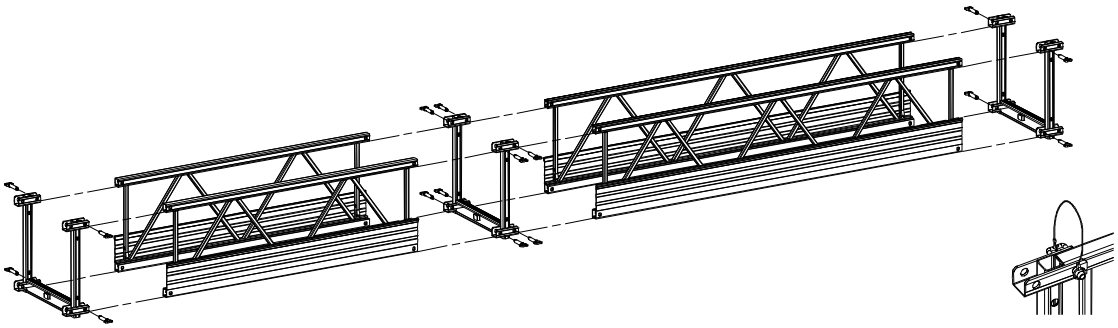

2. Mount casters and guard rail posts and secure with quickpins.

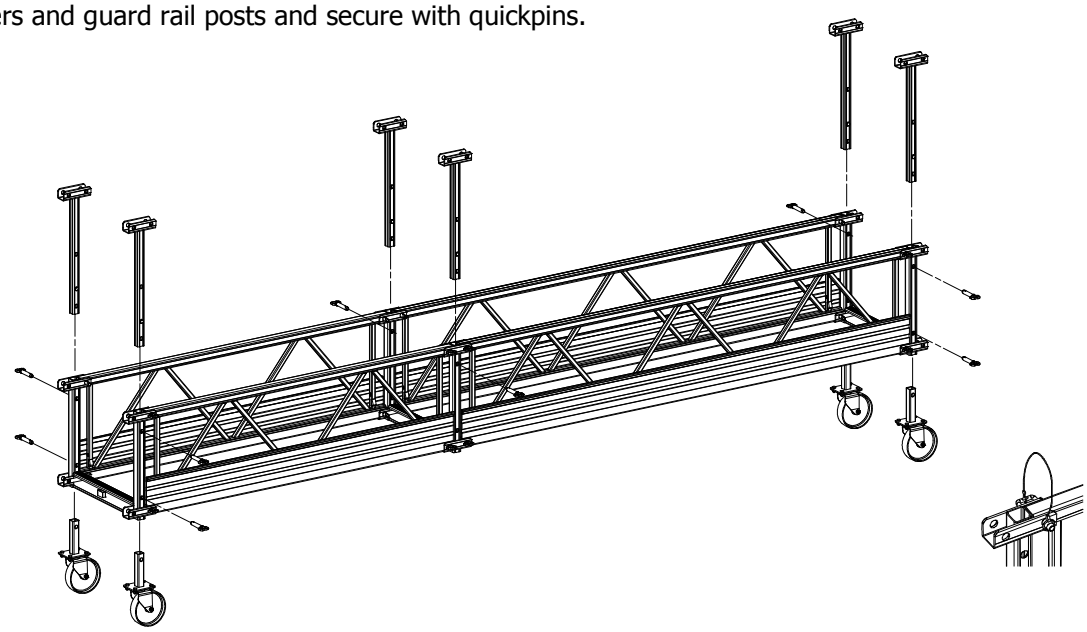

3. Place decks between side frames (non-slip surface facing up). Snap into place behind spring loaded retaining leverarms. Fit guardrails into guardrailposts and secure with quickpins. Mount wallrollers, if used.

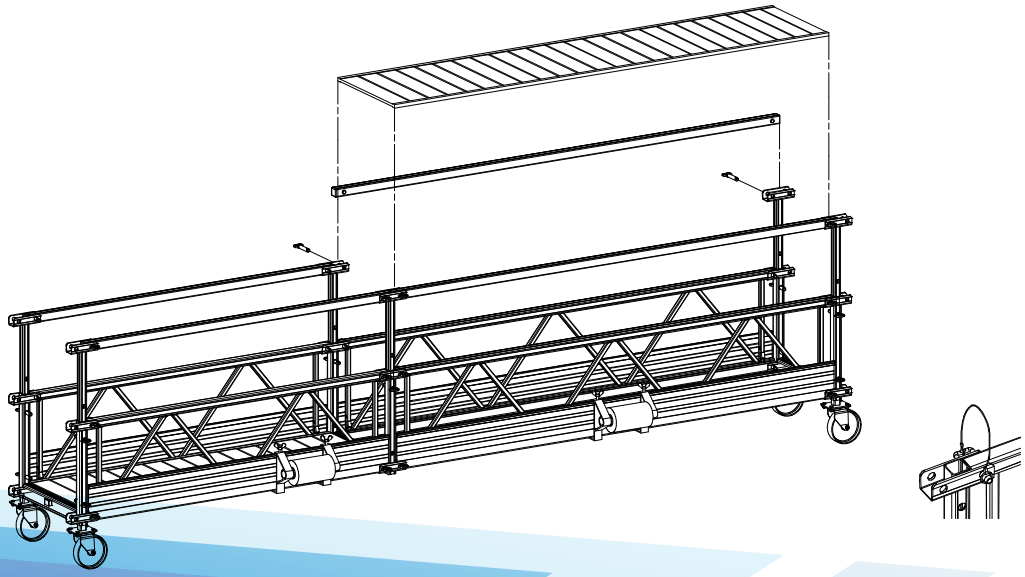

IV. STIRRUPS

IV.1. *General*

A stirrup provides a safe means to mount a hoist onto a work platform.
A stirrup is suitable for (a) certain type(s) and brand(s) of hoist(s).
A stirrup is meant for a certain maximum **Work Load Limit** (WLL) that belongs to a certain type of hoist.

IV.2. *Types of stirrups*

Basicly two types of stirrups can be distinguished: **end-stirrups** and **walk-through-stirrups**.
End-stirrups are located at the very end of a certain length of workplatform.
Walk-through-stirrups are located at a certain distance from the end of a platform, which generates a cantilevered section of workplatform. See "Load capacity and configuration tables" that apply for the considered workplatform, to establish the admissable positions of a stirrup.

IV.3. *End stirrups*

IV.3.1. Endstirrup for **ASTRO 600KG**, **ASTRO 800KG, TITAN 500KG and TITAN 650KG**

- DESCRIPTION AND USE
  The end-stirrup is used on an outer end of a work platform. No separate end guardrail is needed, where there is an end-stirrup. A readable text plate should be present on every end-stirrup, displaying the load and configuration table, similar as the one shown in section III.
  Only use a hoist that the stirrup has been designed for concerning Work Load Limit (WLL) and dimensions as well.

- MOUNTING THE STIRRUP
  The stirrup is to be mounted in the following way: The type plate must be on the inside. (See drawing)
  Note that the stirrup has to be aligned with the rigging point above!

  - The end stirrup is mounted in the U-frame on the outer end of the platform section

  - The end-stirrup is mounted with 4 quick pins.

  - Place the stirrup within the U-frame

  - Connect both stirrup and guardrail posts with the U-frame by two upper quick pins.

  - Type plate at the inside

  - Connect both castor-wheels and stirrup with the U-frame by two lower quick pins.

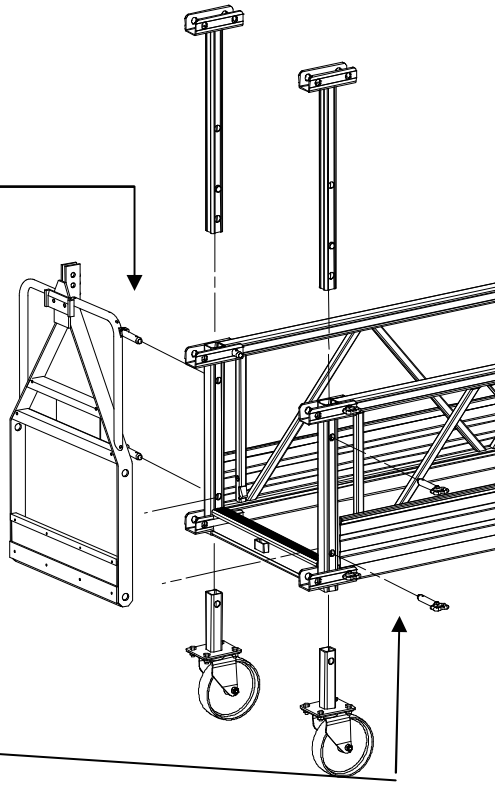

- MOUNTING THE HOIST
  See section V, **Attach the hoist to the stirrup**", for a description of the mounting of the hoist to the stirrup.

IV.4. *Walk-through stirrups*

IV.4.1. Walk-through stirrup for **ASTRO 600KG** and **ASTRO 800KG**

- DESCRIPTION AND USE
  This walk-through stirrup consists of two vertical and two horizontal aluminium beams, connected by cross bars. The stirrup is used on a straight section of MHB work platform when the desired workspace is wider than the maximum distance of hoists that is possible. Walk-through-stirrups are also applied if L-shaped platforms with corner sections are used (see section VII).
  A separate end guardrail is needed.
  On the walkthrough stirrup, a text plate should be present, displaying the load and configuration table, similar as the one shown in section III.
  Only use a hoist that the stirrup has been designed for concerning Work Load Limit (WLL) and dimensions as well.

- MOUNTING THE STIRRUP

The stirrup is to be mounted in the following order:
Note that the stirrup has to be aligned with the rigging point above!

- Make sure that the guardrail is removed at the location where the stirrup is to be located

- Roll the stirrup about halfway underneath the platform

- Lift the stirrup and hook the guardrail hooks onto the guardrail

- Swivel the stirrup straight-up

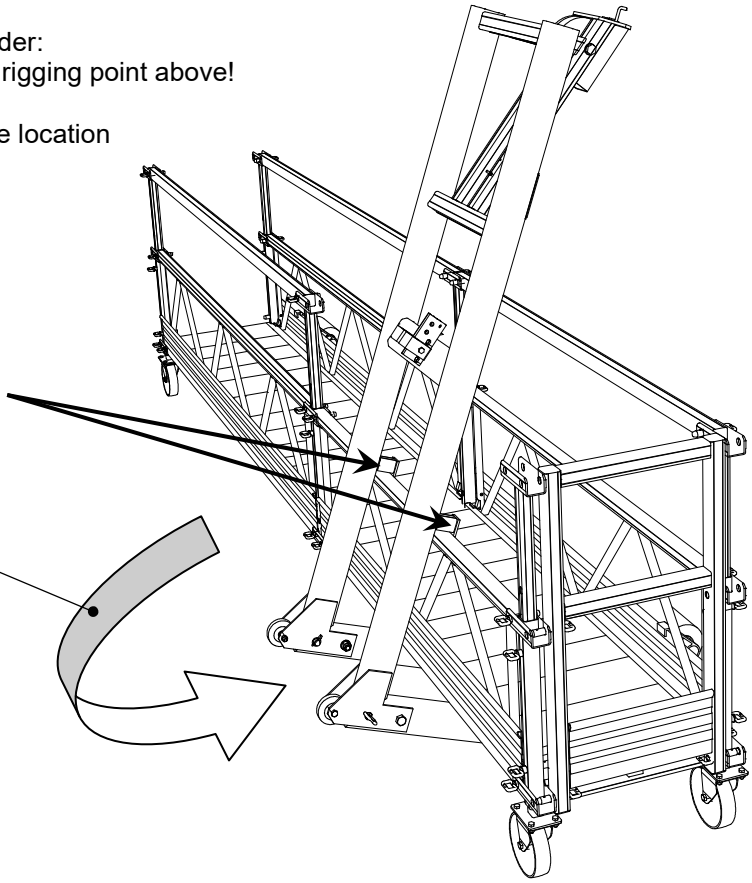

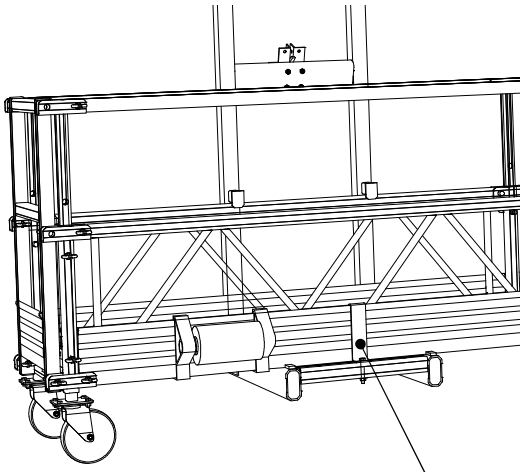

- Mount the bracket onto the toe board and fasten with the washer and nut

- Mount the guardrail that has been removed at first

- Mount an end-guardrail

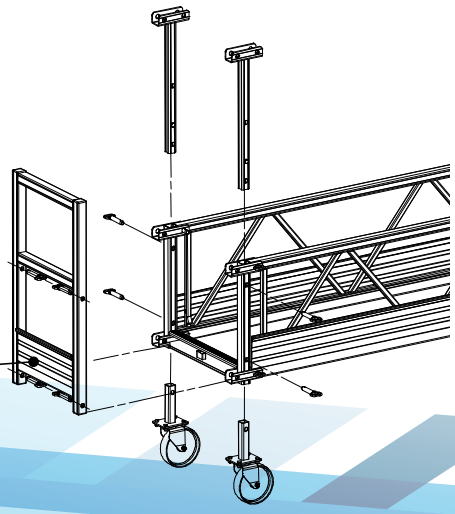

- MOUNTING THE HOIST
  See section V.1, "**Attach the ASTRO hoist to the stirrup**", for a description of the mounting of the hoist to the stirrup.

IV.4.2. Walk-through-stirrup for **TITAN 500KG**, **TITAN 650KG, ASTRO 600KG and ASTRO 800KG.**

- DESCRIPTION AND USE
  This walk-through-stirrup consists of a vertical and horizontal aluminium beam that can hinge for transportation, and can be fixed for use. The height on which the hoist is connected to the vertical beam can be adjusted. The stirrup is used on a straight section of MHB work platform when the desired workspace is wider than the maximum distance of hoists that is possible. Walk-through-stirrups are also applied if L-shaped platforms with corner sections are used (see section VII).
  A separate end guardrail is needed.
  On the walkthrough stirrup, a text plate should be present, displaying the load and configuration table, similar as the one shown in section III.
  Only use a hoist that the stirrup has been designed for concerning Work Load Limit (WLL) and dimensions as well.

- MOUNTING THE STIRRUP
  The mounting of the stirrup is the same as described on page IV-2
  The stirrup is to be mounted in the following order:
  Note that the stirrup has to be aligned with the rigging point above!

  - Make sure that the guardrail is removed at the location where the stirrup is to be located

  - Shove the stirrup about halfway underneath the platform

  - Lift the stirrup and hook the guardrail hooks onto the guardrail

  - Swivel the stirrup straight-up

  - Mount the bracket onto the toe board and fasten with the washer and nut.

  - Mount the guardrail that has been removed at first.

  - Mount an end-guardrail.

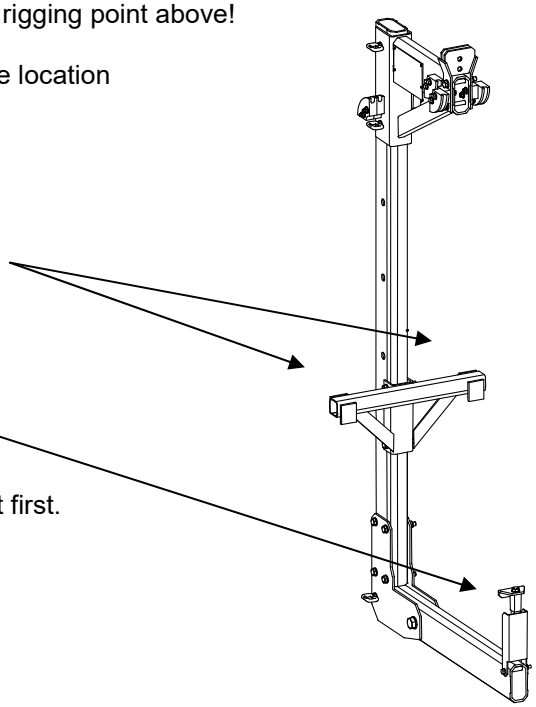

- MOUNTING THE HOIST
  See section V, **Attach the hoist to the stirrup**", for a description of the mounting of the hoist to the stirrup

VI. ROOF SUSPENSIONS

VI.1. *General*

VI.1.1. Description of ROOFBEAMS

ROOFBEAMS

- A roofbeam is a roof suspension construction meant for the suspension of modular platforms.
- Roofbeams are designed and classified for a certain **Work Load Limit (WLL)**.
- Roofbeams are used on flat roofs.
- The roofbeam construction consists of retractable main tubes (front, middle and rear section), mobile front and rear support stands, a shock absorber, counter weights. It is assembled with securable quickpins.
- Suspension- and safetyropes can be attached to the roofbeam. Only ropes, suitable for the used hoist shall be used. See section V for requirements for ropes.

VI.1.2. Use of ROOFBEAMS

- Before assembling the installation, check the load bearing capacity of the roof construction of the building to work on. During normal operation, the roof beam's front support stand carries a maximum load of **1150kg** and the rear supports a maximum of **700kg**.
  To support the load by the roof, it might be necessary to use suitable underlayment for load distribution.

  Under extreme conditions these values are higher; the load on the front support stand can be up to **3.000kg**
  Note that the roof must be able to resist the load generated in an extreme case!
- For adaptation to local situations, the distance between support stands can be adjusted to three different lengths, while, the outreach of the front part can be adjusted to three different lengths for the 400/600 models and two different lengths for the 800kg models.
- The front and rear support stands must always be positioned at the same height.
- The roofbeam loadcapacity and the required number of counter weights can be found on the load and configuration tables, see chapter VI.1.3 or on the type plate of the roofbeam.

VI.1.3. Load capacity and configuration tables

DETERMINE THE REQUIRED NUMBER OF COUNTERWEIGHT AS FOLLOWS:

- Determine the type of roofbeam that is going to be installed, either:
  ROOFBEAM 400 - 600 LOW / HIGH or
  ROOFBEAM 600 - 800 LOW / HIGH

- Determine the length of required **outreach B**
  for ROOFBEAM 400 - 600 LOW / HIGH, either
  standard → 0,9m / 1,2m or
  with extended frontbeam → 1,6m / 1,9m / 2,2m (depending on WLL of applied hoist)
  for ROOFBEAM 600 - 800 LOW / HIGH
  standard → 0,9m / 1,2m

- Determine the **supportdistance A** that is required
  for all types of ROOFBEAMS:
  standard → 4,5m / 5,0m / 5,5m

- Now find the **hoistcapacity (WLL)** of the hoist that will be applied

- On the junction of **supportdistance A** and **hoistcapacity**, the required number of counterweights is found.

EXAMPLE:
A ROOFBEAM 400 - 600 HIGH is installed, with an **outreach B** of 1,2m and a **supportdistance A** of 5,0m.
The applied hoist has a WLL of 600kg. From the table below it can be seen that 20 weights are required.

= 20kg number of counterweights 20kg each / Anzahl Sicherheitsgewichte von je 20kg
nombre de contrepoids de 20kg / aantal contragewichten van elk 20kg

ROOFBEAM 400 - 600

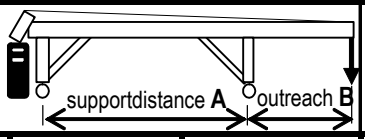

*) **ROOFBEAM 400 / 600**
with extended frontbeam:
mit verlängerte Aussenprofil:
avec poutre extérieur élongé:
met verlengde voorbalk:
art.nr. 415095

outreach B (m)		0,9			1,2			1,6 *			1,9 *			2,2 *		
supportdistance A (m)		4,5	5,0	5,5	4,5	5,0	5,5	4,5	5,0	5,5	4,5	5,0	5,5	4,5	5,0	5,5
Hoist Winde Treuil Takel	400kg	10x	9x	8x	14x	13x	11x	20x	18x	16x	24x	21x	19x	27x	24x	22x
	500kg	13x	12x	10x	18x	16x	15x	25x	22x	20x	30x	27x	24x			
	600kg	16x	14x	13x	22x	20x	18x	31x	27x	25x						

ROOFBEAM 600 - 800

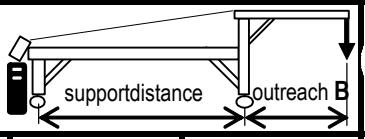

altrex

Altrex B.V.
Postbus 30160
8003 CD Zwolle (NL)
www.altrex.nl

outreach B (m)		0,9			1,2		
supportdistance A (m)		4,5	5,0	5,5	4,5	5,0	5,5
Hoist Winde Treuil Takel	600kg	15x	13x	12x	22x	19x	17x
	650kg	17x	15x	13x	24x	21x	19x
	800kg	21x	19x	17x	30x	26x	24x

Please be sure to consult your Altrex supplier on factory approval for any configurations not listed in the table.
Konsultieren Sie Ihnen Altrex Lieferant wann die gewünschte Konstruktion nicht erwähnt ist in diese Tabelle.
Contacter votre distributeur d'Altrex quand votre configuration désire n'est pas méntionnee dans ce tableau.
Neem contact op met uw Altrex dealer als uw toe te passen configuratie niet vermeld wordt in deze tabel.

Machinery Directive (98/37/EU) Notified Body: 0547 04-06 art. 735670

Each Altrex counterweight (article.no. 414270) weighs 20kg.
Make sure that enough Altrex counterweights are installed, in order to provide the required safetyfactor!
Secure the counterweights on the bracket with the lock, to prevent the weights from being removed by unauthorised persons.

VI.2. *Roof beam ADB 400/600 low*

VI.2.1. Parts identification

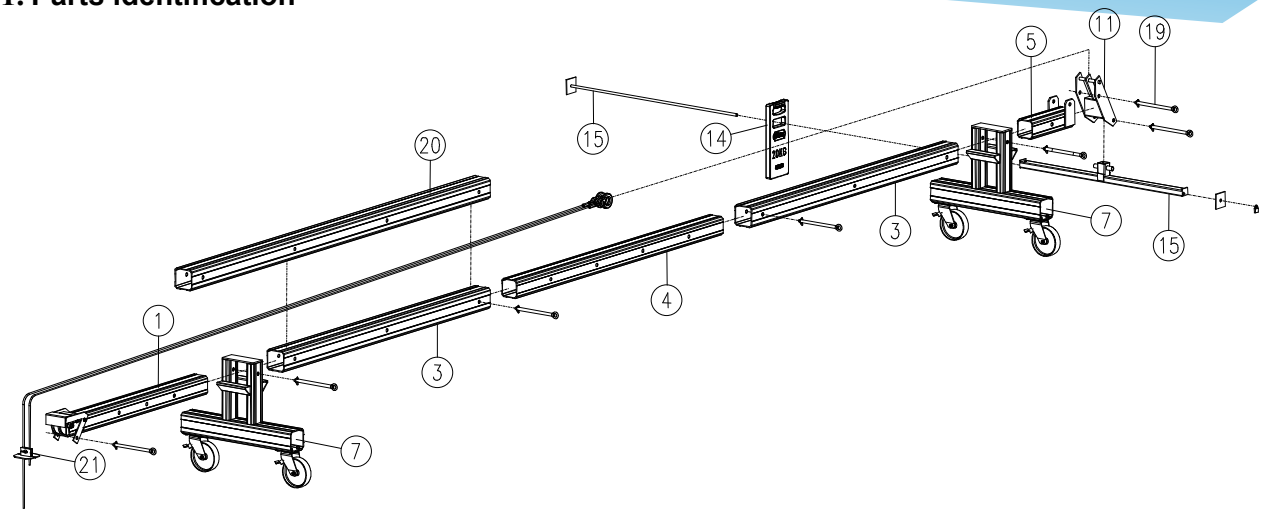

ALUMINIUM ROOF BEAM TYPE 400/600 FOR HOIST WORK LOAD LIMIT MAX. 600 KG				
POS	**description**	**partnr.**	**number**	**weight in kg**
1	front beam 400/600	415050	1	14
3	outer beam *	415090	2 / 1 *	18
4	inner beam	415100	1	15,5
5	shock absorber adaptor	415130	1	4
7	support stand 900 low	415140	2	18
11	shock absorber arm	415210	1	3
14	counterweight ALTREX	415270	See table	20
15	counterweight bracket short incl. security	415276	1	5
19	quickpin long	415320	8	0,5
20	extended outer beam *	415095	1 *	25,9
Total weight (excl.counterweight)				**118 kg**
* partnr. 415095 can be used in stead of partnr.415090 to achieve a greater outreach				

VI.2.2. Dimensions

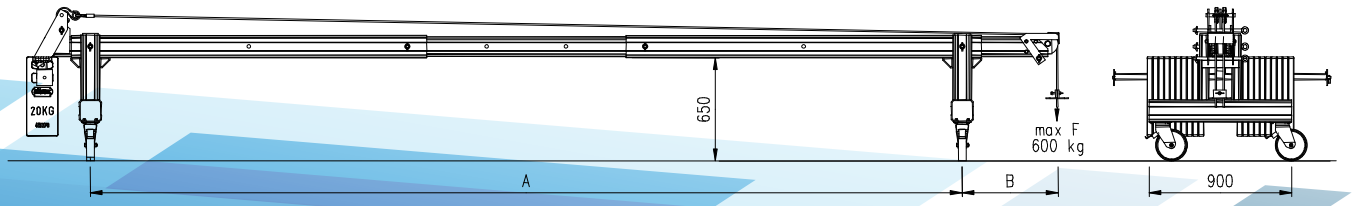

VI.3. *Roof beam ADB 400/600 high*

VI.3.1. Parts identification

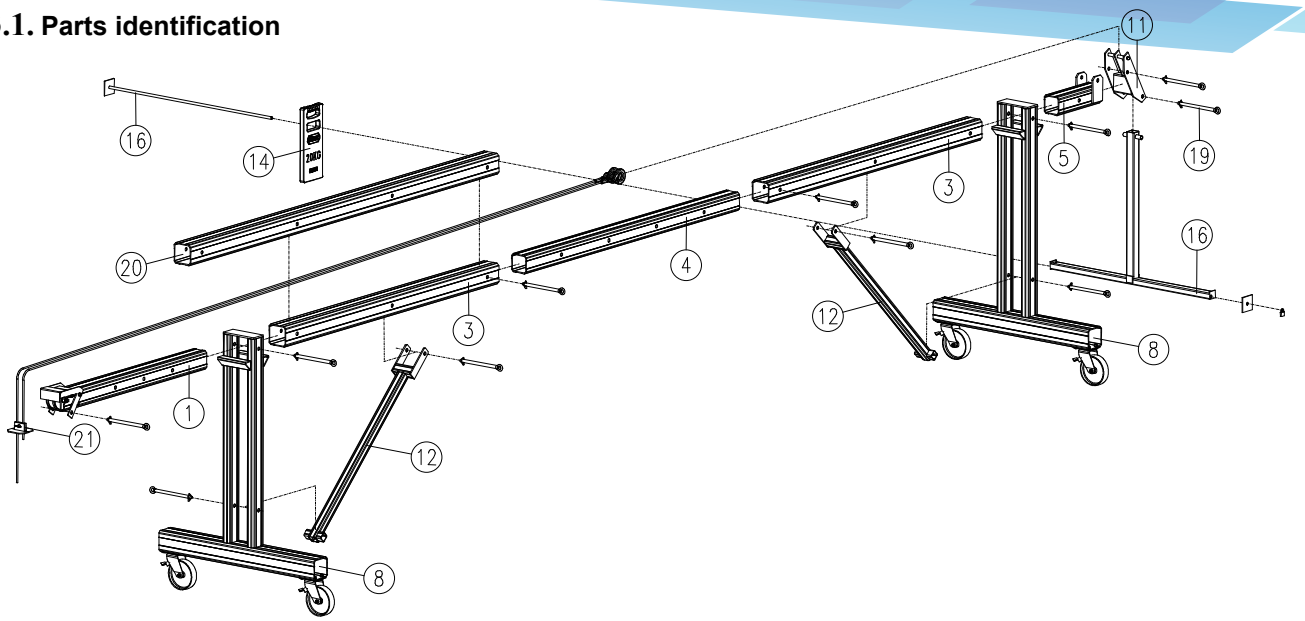

ALUMINIUM ROOF BEAM TYPE 400/600 FOR HOIST WORK LOAD LIMIT MAX. 600 KG				
POS	**description**	**partno.**	**number**	**weight in kg**
1	front beam 400/600	415050	1	14
3	outer beam *	415090	2 / 1 *	18
4	inner beam	415100	1	15,5
5	shock absorber adaptor	415130	1	4
8	support stand 1300 high	415160	2	30
12	Brace	415180	2	4
11	shock absorber arm	415210	1	3
14	counterweight ALTREX	415270	See table	20
16	counterweight bracket long incl. security	415281	1	7
19	quickpin long	415320	12	0,5
20	extended outer beam *	415095	1 *	25,9
Total weight (excl. counterweight)				**154 kg**
* partnr. 415095 can be used in stead of partnr.415090 to achieve a greater outreach				

VI.3.2. Dimensions

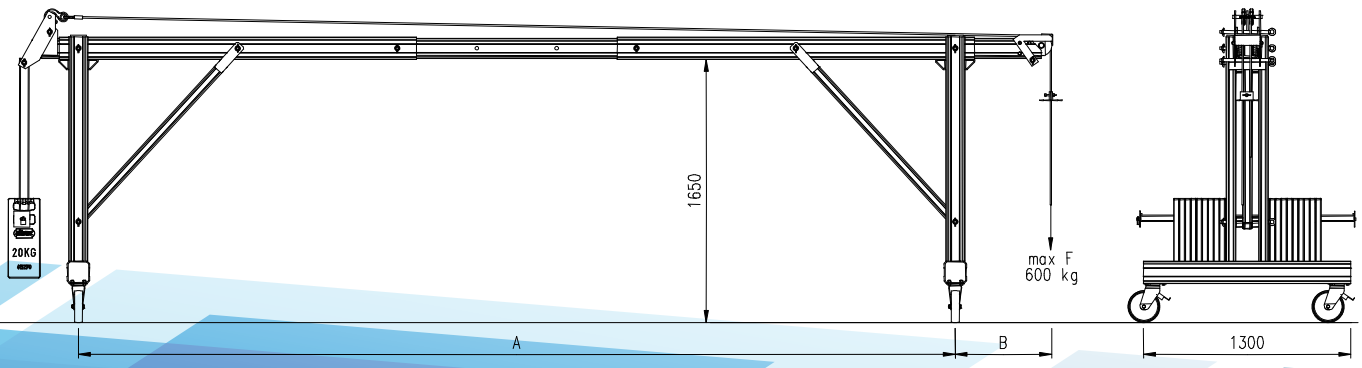

VI.4. *Roof beam ADP 800 low*

VI.4.1. Parts identification

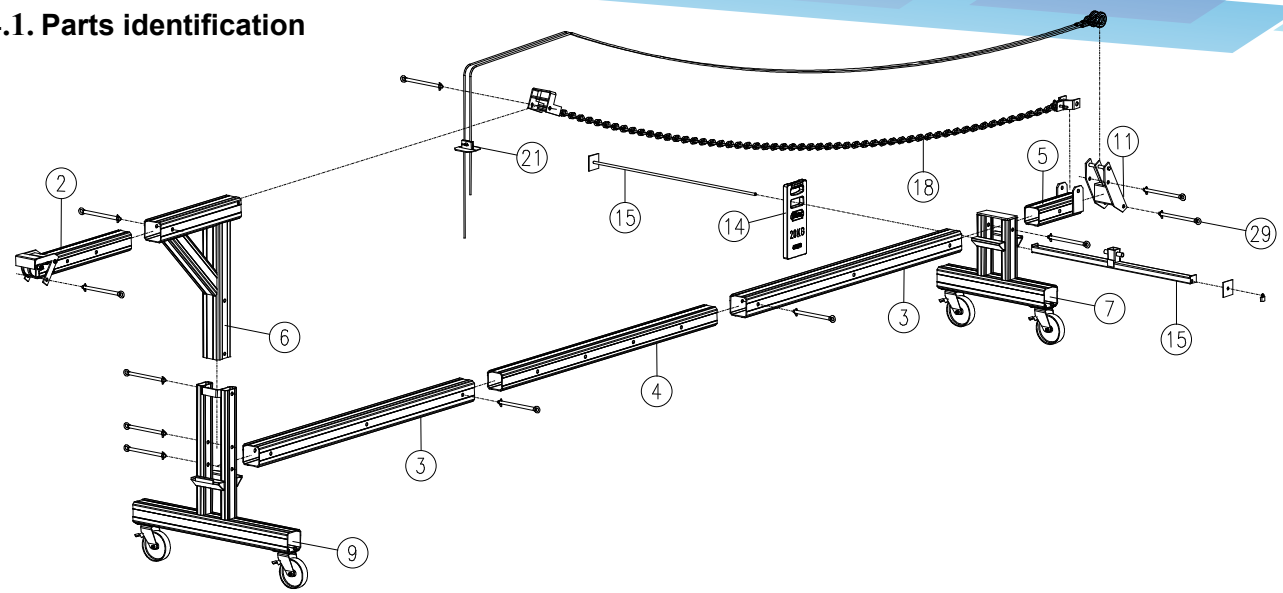

ALUMINIUM ROOF BEAM TYPE 800 FOR HOIST WORK LOAD LIMIT MAX. 800 KG				
POS	**description**	**part no.**	**number**	**weight in kg**
2	front beam 800	415070	1	12,8
3	outer beam	415090	2	18
4	inner beam	415100	1	15,5
6	stanchion 800	415110	1	18
5	shock absorber adaptor	415130	1	4
7	support stand 900 low	415140	1	18
9	front support stand 1300 low	415150	1	23
11	shock absorber arm	415210	1	3
14	counterweight ALTREX	415270	See table	20
15	counterweight bracket long incl. security	415281	1	7
18	chain tensioner complete	415256	1	16
19	quickpin long	415320	12	0,5
Total weight (excl counterweight)				**157 kg**

VI.4.2. Dimensions

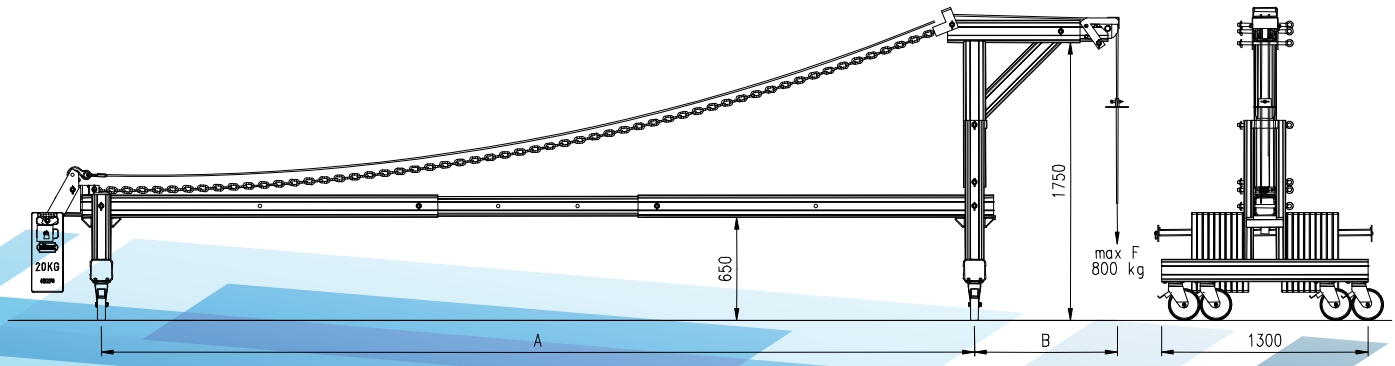

VI.5. *Roof beam ADP 800 high*

VI.5.1. Parts identification

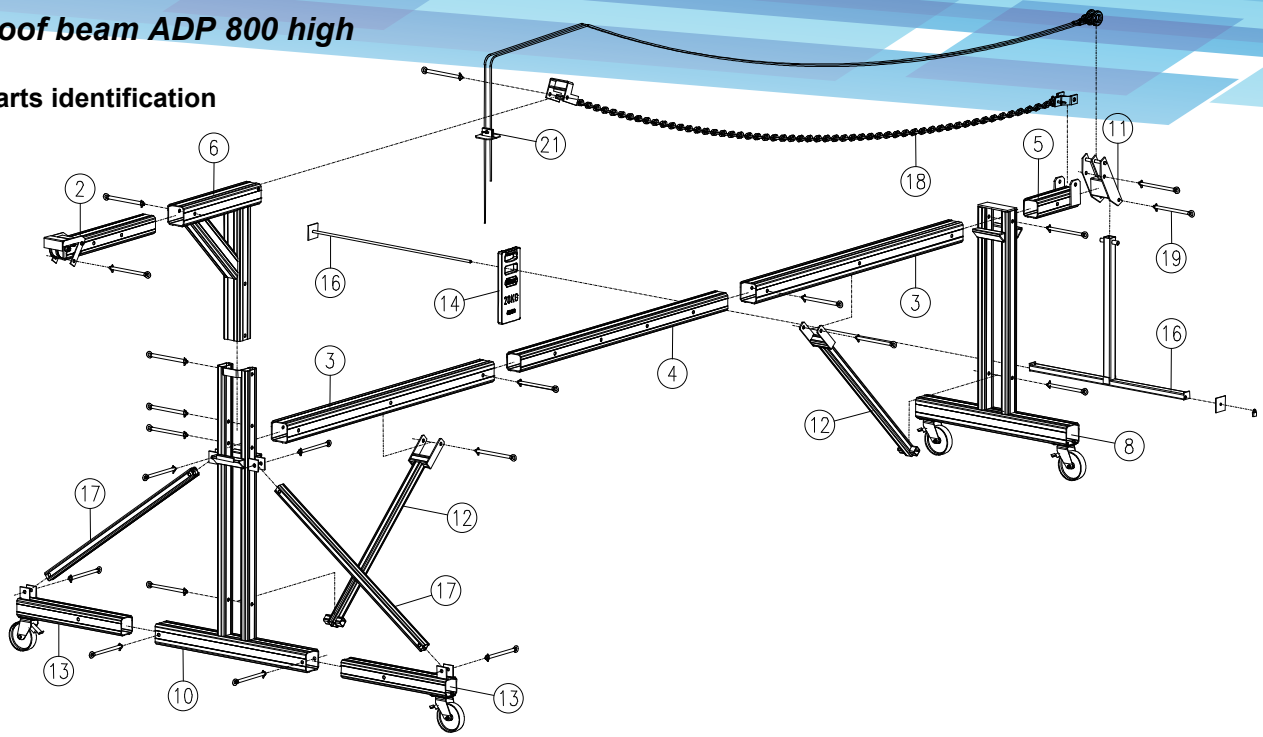

ALUMINIUM ROOF BEAM TYPE 800 FOR HOIST WORK LOAD LIMIT MAX. 800 KG				
POS	**description**	**part no.**	**number**	**weight in kg**
2	front beam 800	415070	1	12,8
3	outer beam	415090	2	18
4	inner beam	415100	1	15,5
5	shock absorber adaptor	415130	1	4
6	stanchion 800	415110	1	18
8	support stand 1300 high	415160	1	30
10	front support stand 2300	415170	1	31
11	shock absorber arm	415210	1	3
12	brace	415180	2	4
13	extension front support stand	415190	2	8
14	counterweight ALTREX	415270	See table	20
16	counterweight bracket long incl. security	415281	1	7
17	brace front support stand	415230	2	3,2
18	chain tensioner complete	415256	1	16
19	quickpin long	415320	22	0,5
Total weight (excl. counterweight)				**215 kg**

VI.5.2. Dimensions

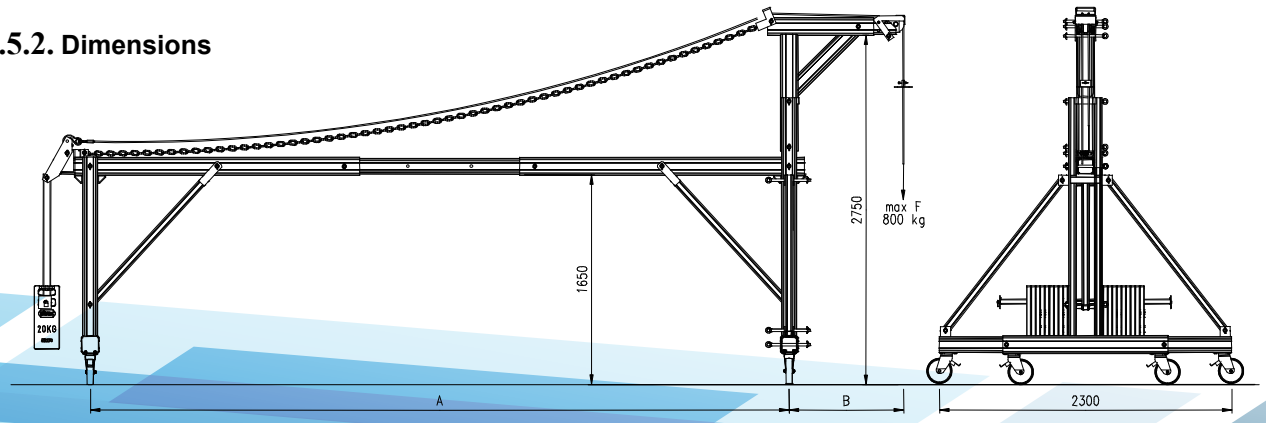

VI.6. *Safe working, Assembly and Use*

VI.6.1. Safe working on roofs

If the roof on which a roof suspension is to be assembled offers safety by means of a parapet or a permanent guardrail of at least 1m in height, no fall arrest equipment has to be used. NOTE: This applies for flat roofs only.

If work has to be done within 4m from the edge of a roof that offers **no** safety by means of a parapet or guardrail of sufficient height, the following applies:

- If a roof offers a suitable point for anchorage of personal fall-arrest equipment, this should be used.
  This applies while assembling, relocating or disassembling of the roof suspension construction.

- If the roof has a parapet of at least 10cm in height, a completely built up roofbeam with counterweight and with wheels in braked position may be used as point of anchorage for fall-arrest equipment. Use there for the quickpin in the shock absorber arm.
  This applies for entering the suspension- and safetyrope on a roofbeam that is already in position.

- In all other cases a different way of fall-protection has to be arranged, e.g. by edgeprotection or a mobile point of achorage.

VI.6.2. Assembly

NOTE: The roof beam may only be assembled after checking and approval of the load carrying capacity of the roof construction; see also VI.1.2.
NOTE: Only undamaged and original parts may be used.

- Build up the roofbeam in a safe way, protected from the risk of falling, see VI.6.1; Safe working on roofs.

- Determine the **outreach** and **supportdistance** and determine the required number of counterweights; see VI.1.3

- Position the main parts of the roofbeam and secure with quick-pins. See also VI.2 / VI.3 / VI.4 / VI.5
  - mount front support stand with outer beam
  - mount eventual stanchion
  - insert front beam and inner beam
  - mount rear support stand and outer beam
  - connect these two pieces
  - mount eventual braces
  - mount shock absorber arm and counterweight bracket
  - mount eventual chain tensioner

- Bring the roofbeam in the desired position and lock the wheelbrakes. The front and rear support's wheelbrakes must be locked during operation and may only be unlocked for relocation.

- Place the counter weights on the counterweight bracket on the roofbeam.
  Secure it with the enclosed bar and lock it to prevent removal by unauthorized persons.

- The wire ropes are hooked, with a hook, to the shock absorber on the rear section, and then guided around the wire rope pulleys in the front section of the beam.
  The wire ropes may only be attached once the counter weights have been fully installed.

- The wire ropes must hang free and may not become entangled with one another.

- Attach the strikerplate onto the safety wire rope at about 20cm below the front beam.

- Put a weight on the tailend of the safetyrope at 20cm above the ground, to pull out all slack of the safety wirerope.

- After making sure that all roof beam parts have been separately checked for completeness and correct assembly, the roof beam is ready for use.

VI.6.3. Terminating use, relocation and disassembly

- Relocate and disassemble the Roof Beam in a safe way, protected from the risk of falling, see VI.6.1; Safe working on roofs.
- Before relocating the roof beam, make sure that nothing is attached to the suspensionrope or safetyrope and that the ropes can travel freely to the new position.
- Be sure to locate the roofbeams in such a way that the distance of the roofbeams corresponds with the distance of the stirrups at platform level.
- After relocating, make sure that all castor wheels are in braked position.
- At the end of use, first remove suspension- and safetyropes, before removal of counterweights or any disassembly of the roofbeam.
- The roofbeam shall be disassembled in the reversed order of its assembly.

VII. CORNER SECTIONS

VII.1. *General*

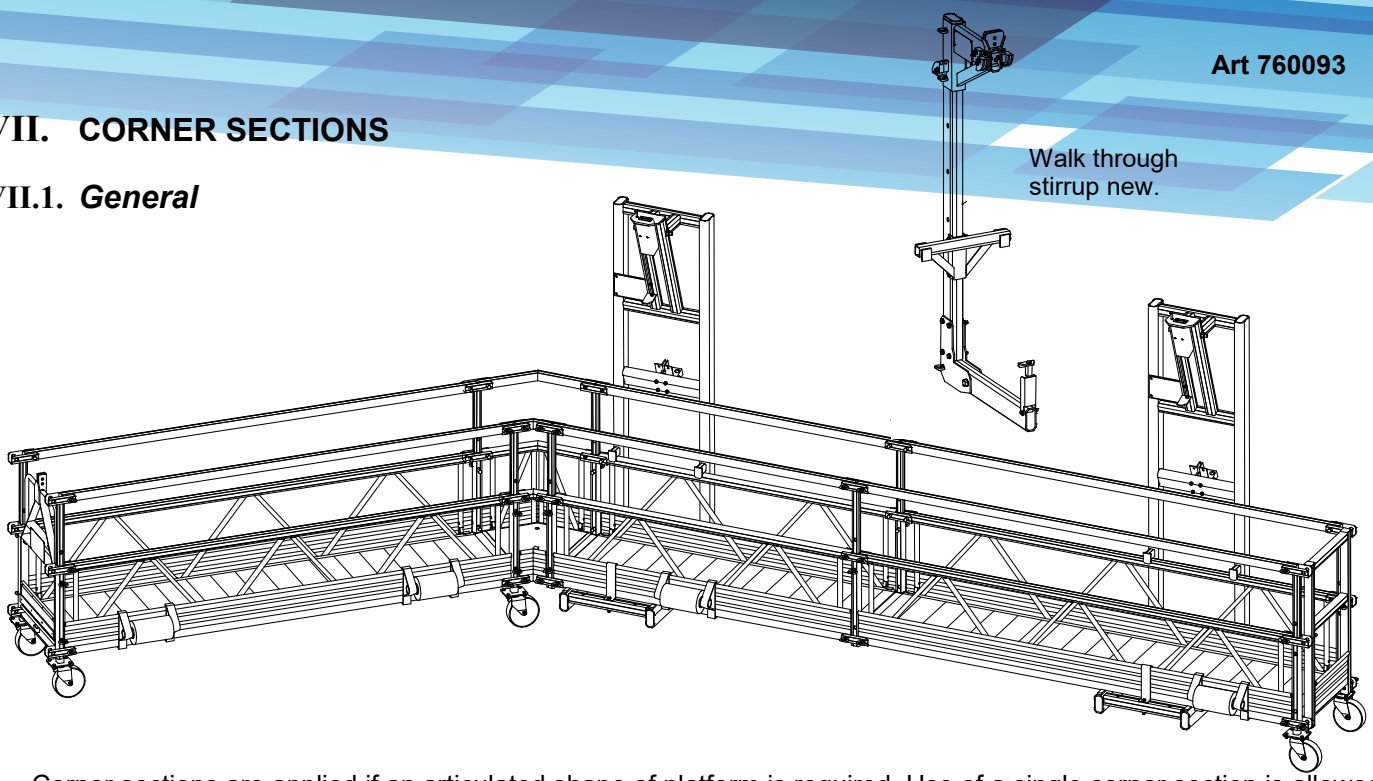

- Corner sections are applied if an articulated shape of platform is required. Use of a single corner section is allowed. This yields a two-legged or L-shaped platform. See chapter VII.4: "Load capacity and configuration tables" for the admissable configurations of MHB with corner sections. Contact your distributor or supplier if different shapes are desired.
- Before assembly and use read these instructions and the instructions of the Altrex modular Platform MHB carefully and completely. If in doubt contact your supplier.
- An L-shaped platform configuration must be suspended from three points. So three stirrups and three hoists are needed on the platform and three suspensionpoints are needed on roof-level.
- Altrex corner sections shall be used in combination with the Altrex modular suspended platform system MHB only.
- The angle between the adjacent sections in case of an adjustable corner section can be adjusted to the following angles: 20°, 30°, 45°, 51°, 60°, 72° and 90°.
- The angle between the adjacent sections in case of a fixed corner section depends on the type of corner section: 30°, 45°, 60° or 90°.

VII.2. *Parts identification*

VII.2.1. adjustable cornersection

Pos.	Description	Quantity	Remarks
423069	Base model	1	Including adjustment assembly chain for outher handrail
735651	Deck	1	
735652	Toeboard	1	2 parts
421513	Guardrailpost	5	
424001	Quickpin	24	

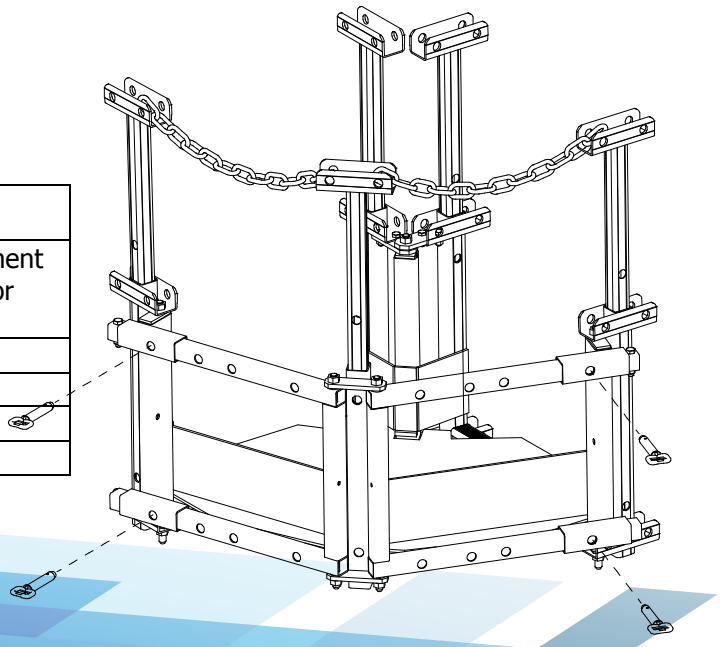

VII.2.2. fixed corner sections

30°corner -->

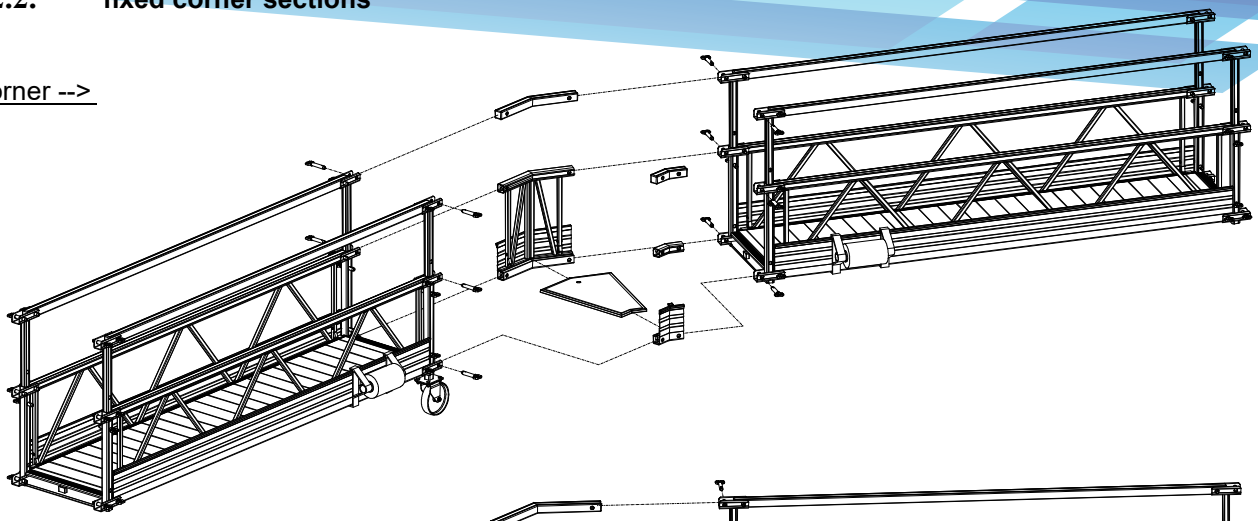

45°corner

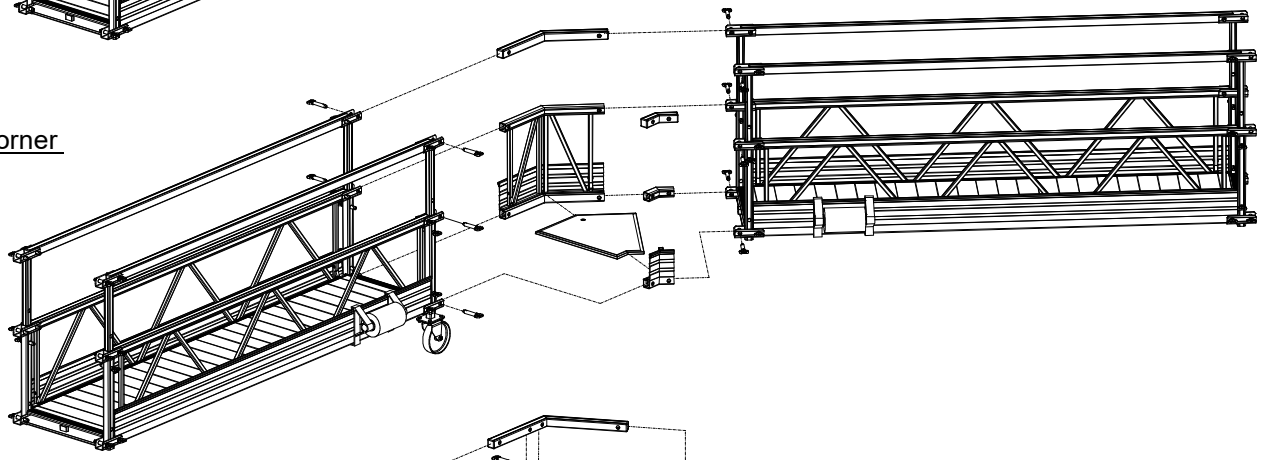

60°corner

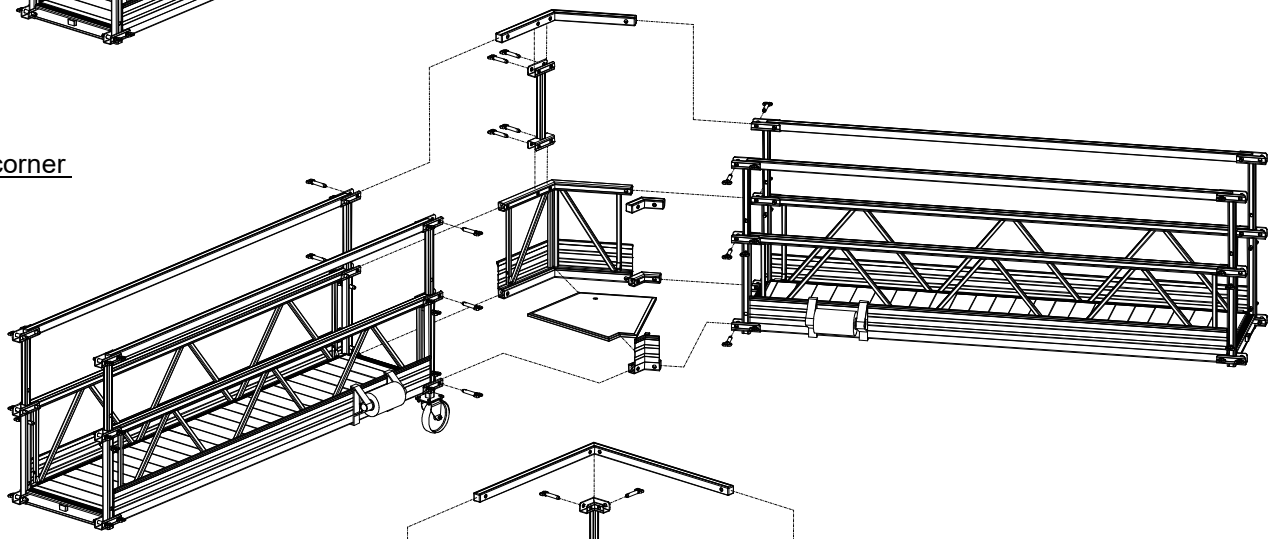

90°corner

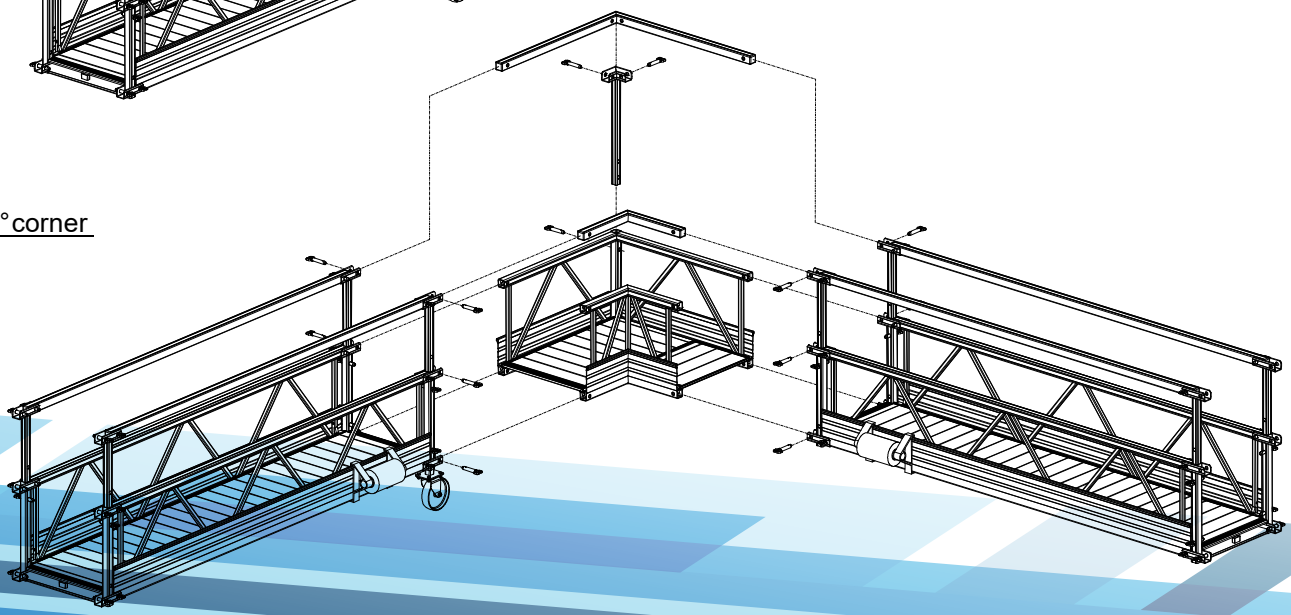

DESCRIPTION OF PART	30°	45°	60°	90°
Fixed corner section complete	423065	423060	423055	423050
Corner sideframe outside	423300	423400	423600	
Corner sideframe inside	423302	423401	423602	
siderail inside	423303	423402	423603	
guardrail outside	423301	423404	423601	423902
guardrail inside	423304	423405	423604	423903
deck	423305	423403	423605	
guardrailpost corner 60°			423606	
construction corner 90°				dwg.404-2-0006
guardrailpost corner 90°				423901
deck 90°short				dwg.404-2-0001
deck 90°long				dwg.404-2-0002

VII.3. *Dimensions*

VII.3.1. adjustable cornersection

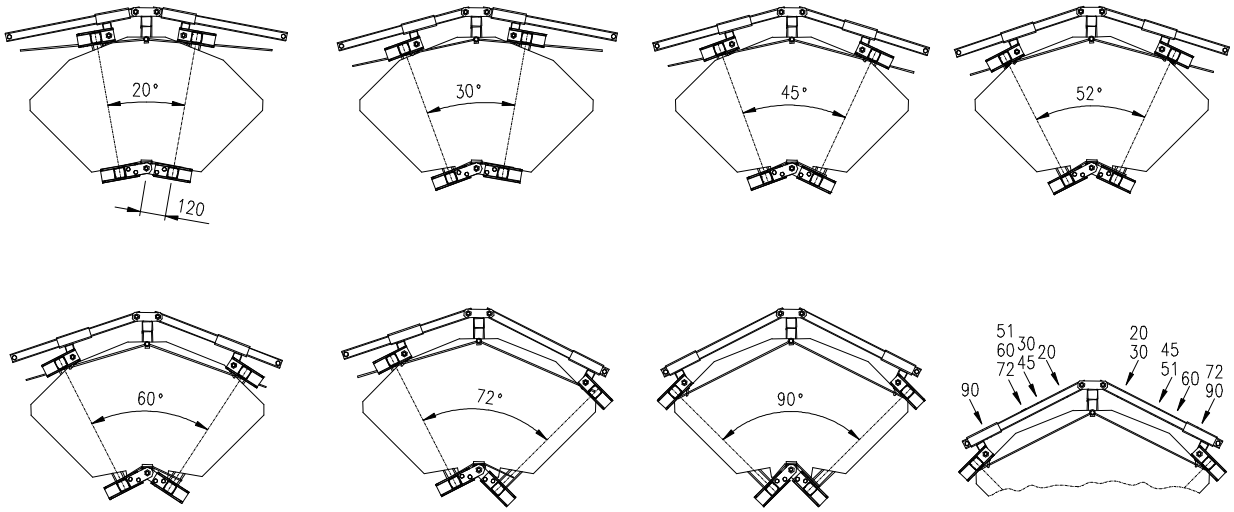

In order to create a certain angle, make sure that the pinned holes correspond with the required angle.
EXAMPLE: In order to make e.g. an angle of 60°, make sure t hat both holes where 60 is indicated are pinned.

VII.3.2. fixed corner section

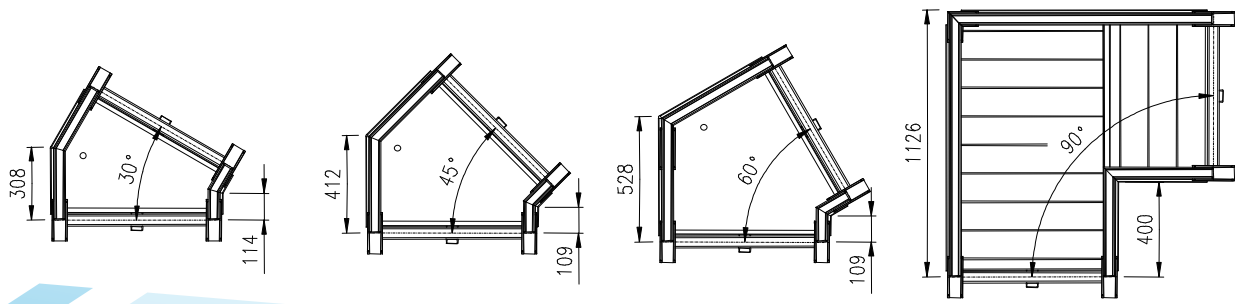

VII.4. *Load capacity and configuration tables*

VII.4.1. Load capacity

Regardless of the used type or angle of cornersection, the load capacity of any **L-shaped** platformconfiguration with three hoists is limited to **250kg** in total.
(two men with light equipment)

VII.4.2. configuration tables

Example: 3m - corner 60°- 2m - 3m - 3m
with C.L.1 = 1m and C.L.2 = 1m

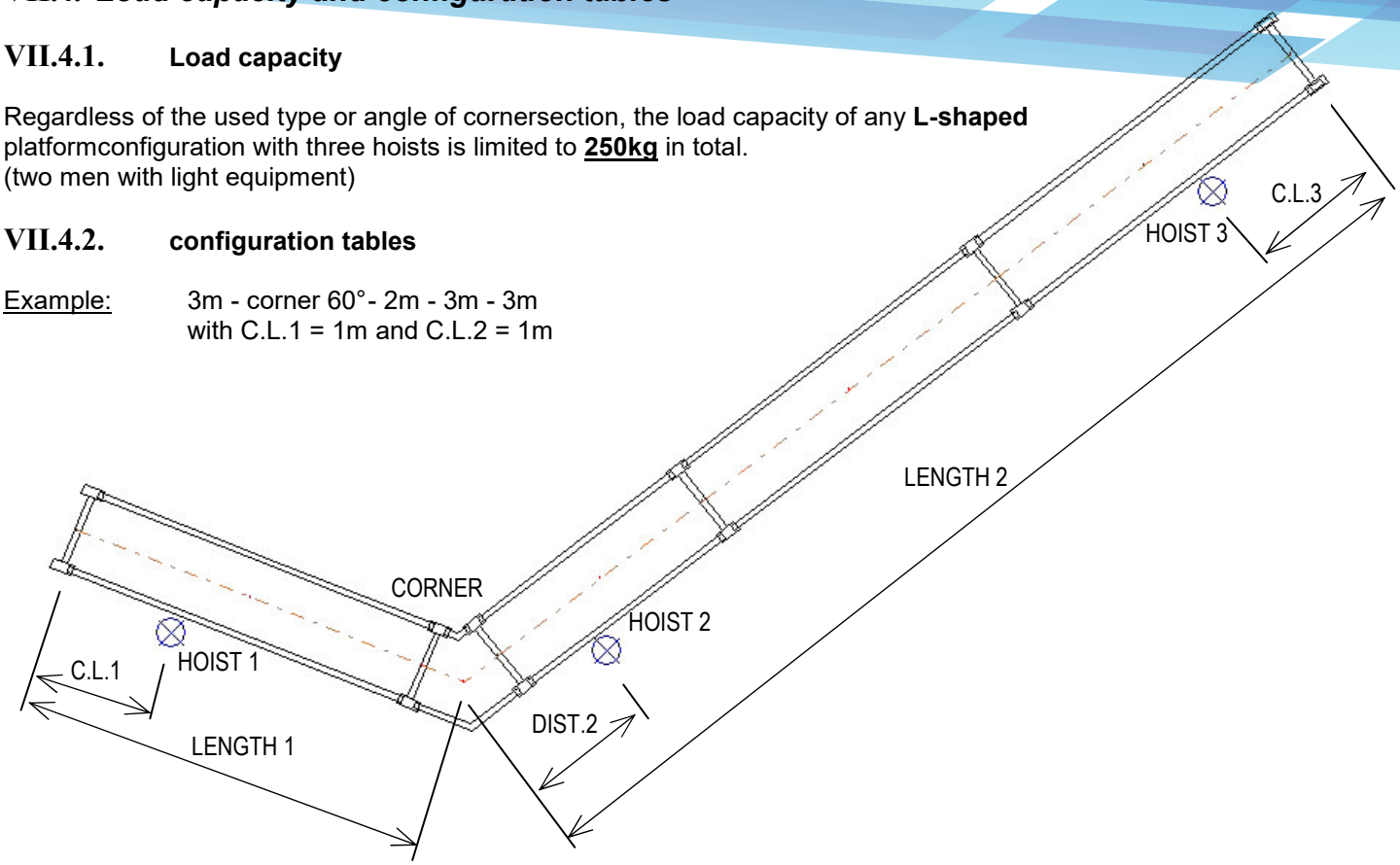

Configurationtable for the use of a single cornersection
NOTE THAT ONLY THESE CONFIGURATIONS ARE APPROVED AND MAY BE USED!

LENGTH 1 (m)	*C.L.1 (m)*	*DIST.2 (m)*	*LENGTH 2 (m)*								
1	0	1	5	6	7	8	9	10	11	12
2	0	1	5	6	7	8	9	10	11	12
3	0; 1	1	5	6	7	8	9	10	11	12
4	0; 1	1	5	6	7	8	9	10	11	12
5	0; 1; 2	1	5	6	7	8	9	10	11	12
6	0; 1; 2	1	5	6	7	8	9	10	11	12
C.L.3 (m)			0; 1	0; 1; 2	0; 1; 2	0; 1; 2	0; 1; 2; 3	0; 1; 2; 3	0; 1; 2; 3	0; 1; 2; 3

SELECT A CONFIGURATION AS FOLLOWS:

- select a certain LENGTH 1 in the first column (e.g. 3m)
  Note that: Length 1 and Length 2 concern the required length of the straight part of workplatform, adjecent to a corner section.
  Note that: Length 1 is always the shorter leg of both
  Note that: The configuration may be mirrored

- the admissable cantilever length **C.L.1** on LENGTH 1 is found in the second column "C.L.1", (e.g. 1m)
  Note that if C.L. = 0, this implies an Endstirrup, while a C.L. of 1, 2 or 3 implies a walk through stirrup
  Note that the distance DIST.2 form the corner till the middle stirrup must be 1m or less

- select a certain LENGTH 2 (e.g. 8m)

- the admissable cantilever length C.L.3 on LENGTH 2 is found in the lowest row of the column of the chosen LENGTH 2. In this case either 0, 1 or 2m.

VII.5. *Assembly*

VII.5.1. Sequence of assembly

The sequence of assembly of the **adjustable conersection** is as follows:

- For first use: At the end of the upper parts of the red coloured adjustment tubes a bolt has been mounted as an end stop to prevent unintentional separation of the adjustment construction. Remove the bolts and slide inner tubes into the outer tubes. Mount the same bolts and nut as an end stop.

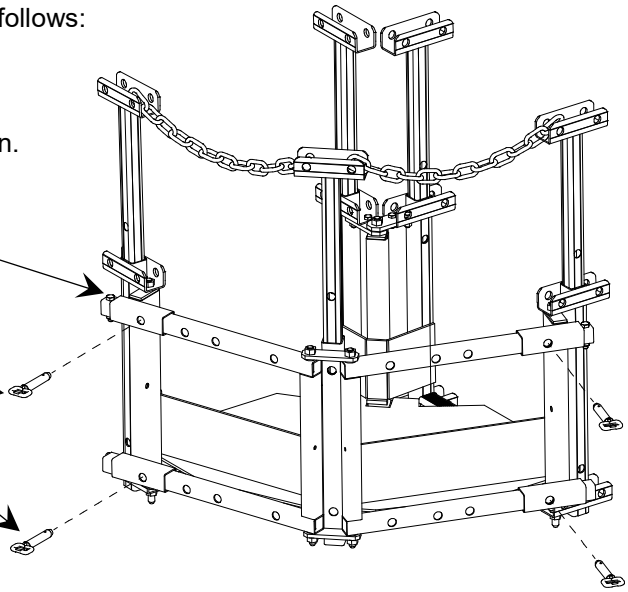

- The angle shall be adjusted as required for the job. Secure the correct angle with four quick-pins

- In order to create a certain angle, make sure that the pinned holes correspond with the required angle, as seen in the topview of the adjustable cornersection:

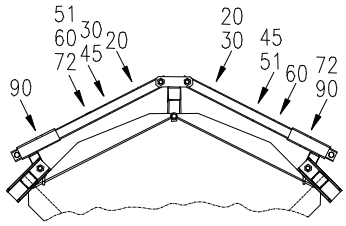

- Built up two MHB platforms. See section III for instructions about assembling MHB platforms.
- For allowed combinations of lengths, see section VII.4.4. Make sure that the decks are already mounted.
- Connect the two platform sections to the corner section.
- Assemble and secure the cornersection platformdeck, toe-boards.
- Insert the guardrail posts into the adjustable corner sections.
- Connect the guard rail chain to the guard rail posts at the outside of the corner section in such way that the chain is in tight as much as possible.
- Check whether the total assembly is complete and whether all quick-pins have been installed and secured.
- Check whether at the end of the upper parts of the adjustment tubes a bolt has been mounted as an end stop to prevent unintentional separation of the adjustment construction.

VII.5.2. Check before use

The sequence of assembly of the **fixed conersection** is as follows:

- Make sure that the chosen angle of the corner section corresponds with the angle required for the job.
- Built up two MHB platforms. See section III for instructions about assembling MHB platforms.
- For allowed combinations of lengths, see section VII.4.4. Make sure that the decks are already mounted.
- Connect the corner sections' parts inbetween the two platformsections. First the sideframeparts then the deck and guardrailposts with guardrail.
- Check whether the total assembly is complete and whether all quick-pins have been installed and secured.

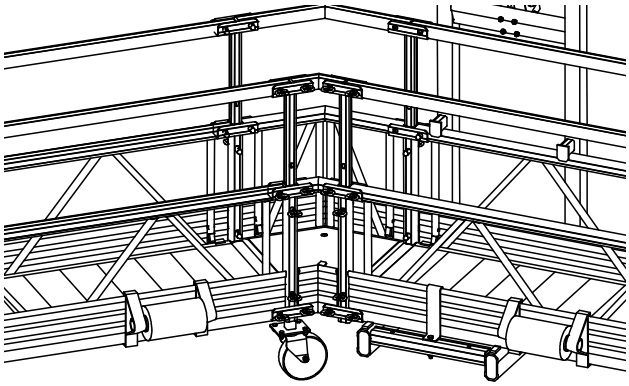

General:

- Control boxes shall preferably be positioned on the platform at a location near the corner section, from where the operator can oversee all three hoists.

VII.5.3. Warning

The following warning label shall be attached to a corner section:

Art. nr. 735668 03-06	Bij gebruik van deze hoeksectie is de max. belasting inclusief personen 250 kg. voor de gehele configuratie. **Alle andere belastingtabellen op deze hangbrug zijn niet geldig.** Voor opbouw instructie zie handboek.	Bei der Benutzung dieser Ecksection beträgt die max. Tragfähigkeit einschließlich Personen 250Kg. für die kompletten Bühnenaufbau. **Alle sonstigen Tragfähigkeitstabelle auf dieser Arbeitsbühne sind nicht Gültig.** Siehe Betriebsanleitung der Arbeitsbühne.	altrex
	When using this cornersection the max. loadability including persons is 250Kg. for this configuration. **All other loadability-tables on this configuration are not valid.** Check users manual for the build up instructions.	Pendant usage de cette section angulaire réglable le charge max, inclusive des personnes est 250 kg. pour cette configuration. **Tous les autres tableaux des charges admissible pour cette nacelle sont pas valide.** Pour assemblage , utiliser votre manuel de notice de montage.	**Altrex B.V. Postbus 30160 8003 CD Zwolle (NL) www.altrex.nl**

VIII DOUBLE-DECK-MHB

VIII.1. *General*

VIII.1.1. Description

The MHB Double Deck provides a double level work platform. It constits of two single MHB workplatforms that are connected by ladderparts on either end. To be able to move from one to the other level, the upper platform has one platformdeck with hatch, just above the ladderpart.
The Double Deck platform can either be suspended by two end-stirrups or two walk-through stirrups that are connected to the upper MHB platform.

VIII.1.2. Use

The Altrex MHB work platform is meant to be used for "medium duty" jobs (<300kg/m²) such as finishing, building, inspection and maintenance on facades and ceilings of buildings, bridges and other structures.
Only the configurations indicated at the "Load capacity and configuration tables" in chapter VIII.3 may be used

VIII.2. *Dimensions*

The difference in platform level has been indicated. For dimensions of MHB platform, see section III.

Example:

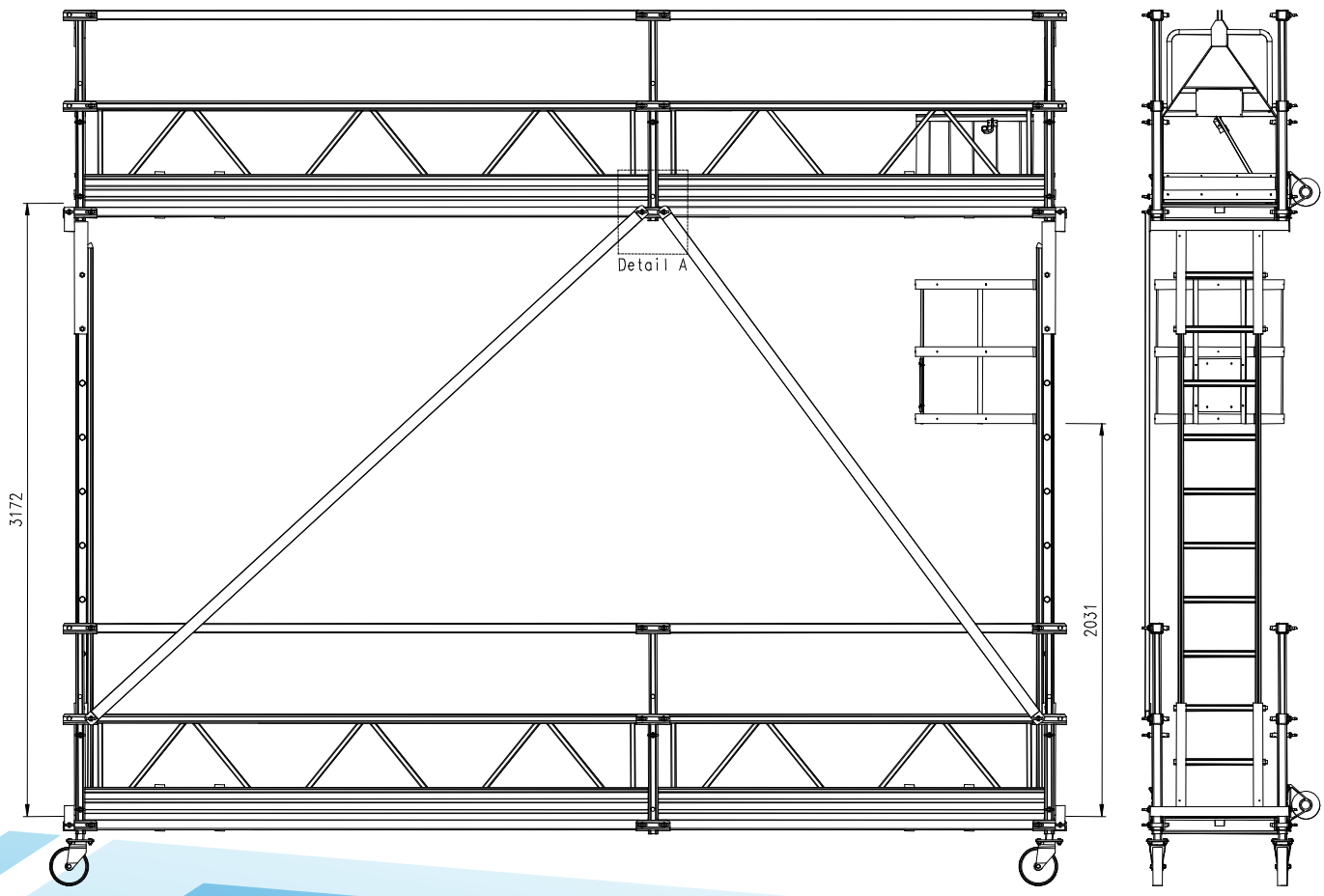

VIII.3. *Parts identification*

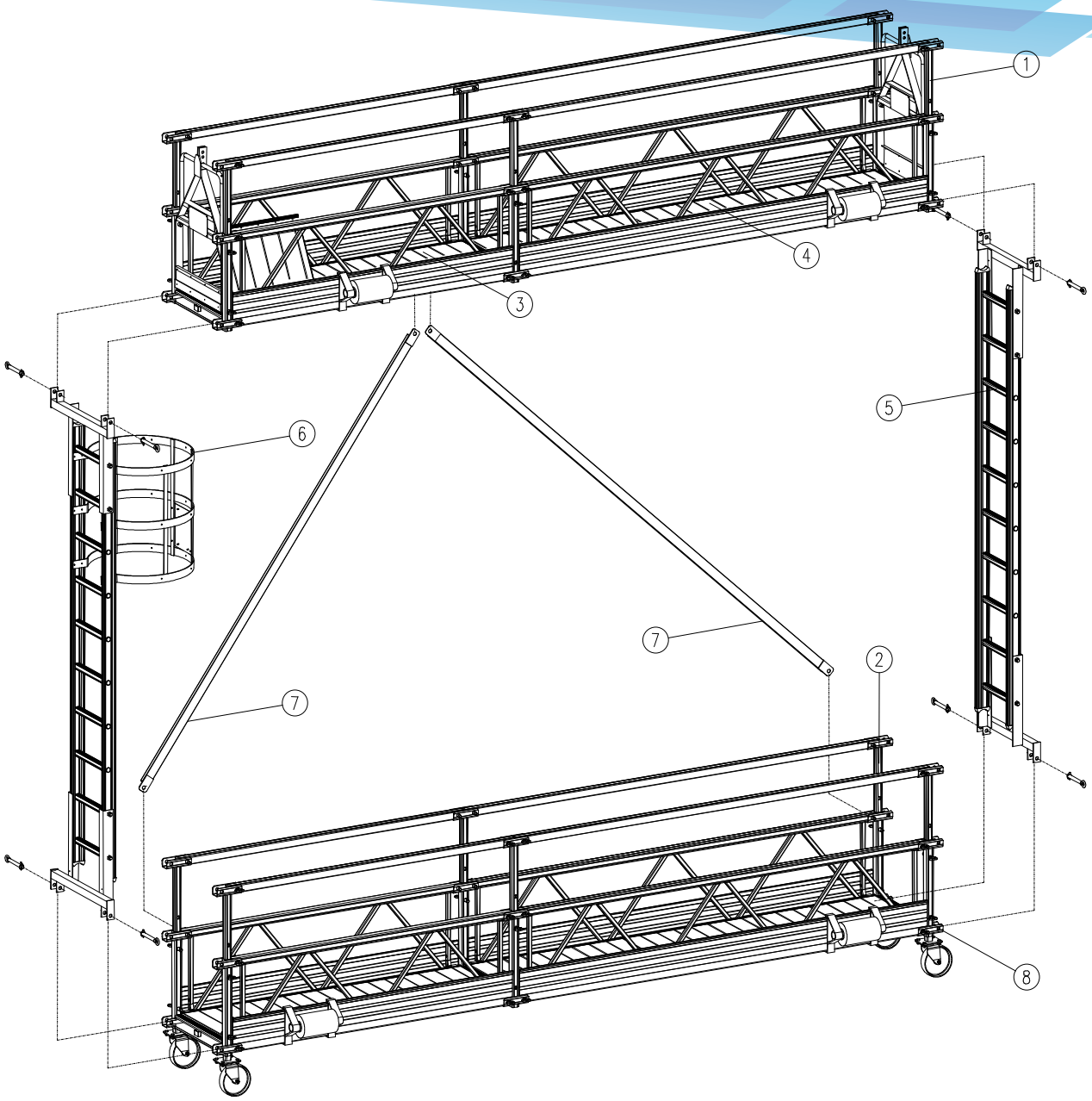

Partslist:

No.	Description	Partno.	Weight	Number
1	Suspended platform with stirrups	-		1
2	Suspended platform without stirrups	-		1
3	Aluminium floor	-		-
4	Aluminium floor with trapdoor 2m / 3m	422602 / -603		1
5	Store connection MHB	423082		1
6	Store connection MHB with cage	423083		1
(7)	diagonal brace platform 1m	423091		-
7	diagonal brace platform 2m	423092		-
7	diagonal brace platform 3m	423093		-
8	quick pin MHB long	424002		8

VIII.4.*Assembly*

- Build the upper suspended platform [1] according to the MHB-assembly instructions See section III. Choose a configuration according to the "Load and configuration tables" in chapter VIII.4. Note that a platform with hatch is mounted on the side of the paltform where the caged ladder will be located.

- Mount the stirrups; These can be either end stirrups or walkthrough stirrups (see section IV) and mount the hoists. (see section V)

- Lead the suspension ropes through the suspension points of the roof-beams and through the hoists according to the instructions of the manufacturer. See section V "Hoists".

- Mount the connecting ladders or storeconnection 5 and 6] with the long quick pins [8] (4x) on both sides of the upper suspended platform.

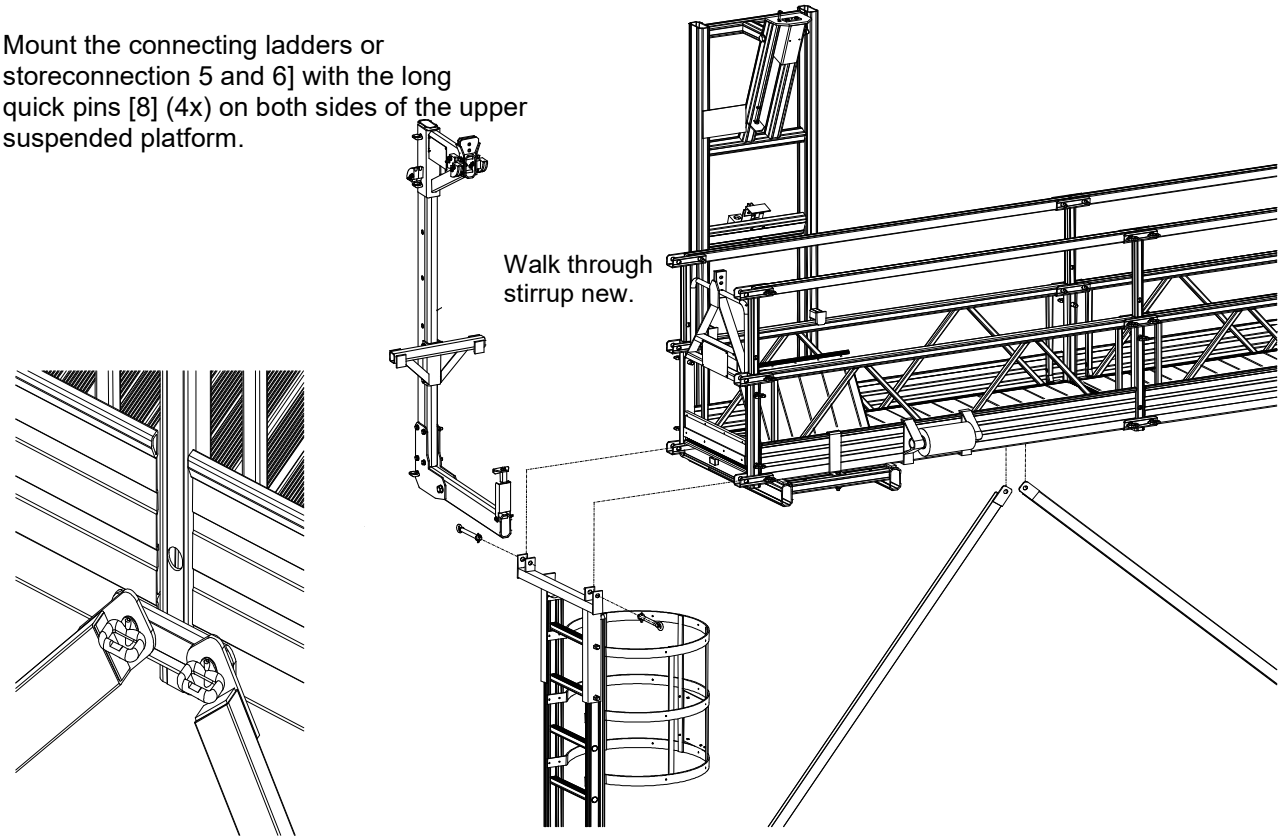

- Attach the diagonal braces [7] to the upper suspended platform, on the non-facade side, and if possible on the outer platform sections, with the quick pins of the suspended platform, see detail. Secure all quick pins

- Lift the installation until the ladder parts hang vertically.

- Built the lower suspended platform [2] and attach it with the long quick pins [8] (4x) between the two ladder parts.

- Attach the other diagonal braces' ends to the lower suspended platform, as indicated in figure.

VIII.5. *Load capacity and configuration tables*

VIII.5.1. MHB Double Deck with end stirrup

The column 500 kg is valid for the Titan 503
The column 600 kg is valid for the Titam 653
The column 650 kg is valid for the Astro E86-CTO
The column 800 kg is valid for the Astro E89-CTO

Zorg voor een symmetrische opbouw
Trag Sorg für eine symmetrische Aufbau
Une construction symétrique est obligatoire
Make sure that: construction is built up symmetrical

Belastbaarheid is inclusief personen
Belastbarkeit ist inklusif Personen
Chargabilitéestinclusivement personnes
Loadability includes weight of persons

Work Load LIMIT (WLL)
Takel / Winde / Treuil / Hoist

03-06 /art 735572

Totale lengte / Gesamtlänge / Longeur Plateforme / Total length	Opbouwschema / Aufbau / Modules / Arrangement	Eigen gewicht / Eigen Gewicht / Propre poids / Self weight	500kg Belasting / Nutzlast / Charge / Load	500kg MAX. NO.	600kg Belasting / Nutzlast / Charge / Load	600kg MAX. NO.	650kg Belasting / Nutzlast / Charge / Load	650kg MAX.NO.	800kg Belasting / Nutzlast / Charge / Load	800kg MAX.NO.
[m]		[m]	[kg]		[kg]		[kg]		[kg]	
3	3	368	360	3	720	3	720	3	720	3
4	2 2	407	320	3	420	4	560	4	1080	4
5	3 2	449	300	3	390	4	490	5	690	5
6	3 3	488	280	3	360	4	450	5	620	6
7	2 3 2	527	260	2	340	3	420	4	570	6
8	3 2 3	569	210	2	280	3	360	4	490	5
9	3 3 3	609	200	2	270	2	340	3	470	5
10	3 2 2 3	648			200	2	260	2	370	4
11	3 2 3 3	690			200	2	260	2	360	4
12	3 3 3 3	729					250	2	360	4

Altrex B.V.
Postbus 30160
8003 CD Zwolle (NL)
www.altrex.nl

vloerdruk / Bodendruck / charge de surface / floorpressure
max300kg/m²

Voor takel type zie handleiding
Für Winde typ siehe die Anleitung
Pour treuil type voire manuel
For type of Hoist see the manual

Machine Richtlijn / Maschinenrichlinie / Directive sur les Machines / Machinery Directive
(98/37/EU)

Etagebrug met eindbeugels
Doppelstockbühne mit Endbügeln
Platforme double niveau avec etiers de suspension
Multideck platform with end-stirrups

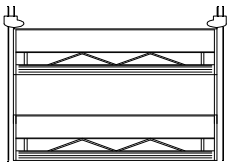

Notified Body: 0547

Neem contact op met uw Altrex dealer indien uw toe te passen configuratie niet vermeld wordt in deze tabel.
Konsultieren Sie ihren Altrex Lieferant wann die gewünschte Konstruktion nicht erwähnt ist in diese Tabelle.
Contacter votre distributeur dÄltrex quand votre configuration désire n"est pas méntionnee dans ce tableau.
Please be sure to consult with your Altrex supplier on factory approval for any configurations not listed in the table.

If you don't use a Titon or Astro hoist, be sure to use a hoist that has the same or more capacity as mentioned in the above table.

VIII.5.2. MHB Double Deck with walk through stirrup

The column 500 kg is valid for the Titan 503
The column 600 kg is valid for the Titam 653
The column 650 kg is valid for the Astro E86-CTO
The column 800 kg is valid for the Astro E89-CTO

= 80kg

Zorg voor een symmetrische opbouw
Traq Sorg für eine symmetrische Aufbau
Une construction symétrique est obligatoire
Make sure that the construction is built up symmetrical

Belastbaarheid is inclusief personen
Belastbarkeit ist inklusif Personen
Chargabilitéestinclusivement personnes
Loadability includes weight of persons

Work Load LIMIT (WLL)
Takel / Winde / Treuil / Hoist

Totale lengte / Gesamtlänge / Longeur Plateforme / Total length	Opbouwschema / Aufbau / Modules / Arrangement	Kabelafstand / Tragseilabstand / Distance entr'axes étriers / Cable distance	Eigen gewicht / Eigen Gewicht / Propre poids / Self weight	500kg Belasting / Nutzlast / Charge / Load	500kg MAX. NO.	600kg Belasting / Nutzlast / Charge / Load	600kg MAX. NO.	650kg Belasting / Nutzlast / Charge / Load	650kg MAX. NO.	800kg Belasting / Nutzlast / Charge / Load	800kg MAX. NO.
[m]		[m]	[kg]	[kg]		[kg]		[kg]		[kg]	
3	3	2	458	320	3	420	3	560	3	1080	3
4	2 2	3	497	300	3	390	4	490	4	690	4
5	3 2	4	539	280	3	360	4	450	5	620	5
6	3 3	5	578	260	2	340	3	420	4	570	6
7	2 3 2	6	617	210	2	280	3	360	4	490	5
8	3 2 3	7	659	200	2	270	2	340	3	470	5
9	3 3 3	8	699			200	2	260	2	370	4
10	3 2 2 3	9	738			200	2	260	2	360	4
11	3 2 3 3	10	780					250	2	360	4
12	3 3 3 3	11	819					240	2	310	3

03-06 / art.735669

ALTREX B.V.
Postbus 30160
8003 CD Zwolle (NL)
www.altrex.nl

vloerdruk / Bodendrück /
charge de surface / floorpressure
max. 300kg/m²

Voor takel type zie handleiding
Für Winde typ siehe die Anleitung
Pour treuil type voire manuel
For type of Hoist see the manual

Machine Richtlijn /
Maschinenrichlinie /
Directive sur les Machines /
Machinery Directive /
(98/37/EU)

Notified Body: 0547

Etagebrug met doorloopbeugels
Doppelstockbühne mit Durchlaufbügeln
Platforme double niveau avec etiers de passage
Multideck platform with walk-through stirrups

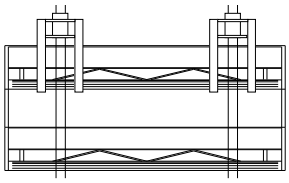

Neem contact op met uw Altrex dealer indien uw toe te passen configuratie niet vermeld wordt in deze tabel.
Konsultieren Sie ihren Altrex Lieferant wann die gewünschte Konstruktion nicht erwähnt ist in diese Tabelle.
Contacter votre distributeur d'Altrex quand votre configuration désire n'est pas méntionnee dans ce tableau.
Please be sure to consult with your Altrex supplier on factory approval for any configurations not listed in the table.

If you don't use a Titon or Astro hoist, be sure to use a hoist that has the same or more capacity as mentioned in the above table.

IX CHECKLIST TEMPORARY SUSPENDED PLATFORM SYSTEM (MHB)

MECHANIC: Point 1 t/m 34 ought to be done by every first assembly and by change of configuration be checked and sign of by a certified mechanic.

USER: Point 7 t/m 34 ought to be done before using the installation be checked and sign of by the user.

nr.	CHECK TO BE MADE	YES	NO	N.R.
1	Has the assembly of the roof suspension been executed according to the assembly instructions?	❑	❑	❑
2	Has assembly of the workplatform been executed according the assembly instructions?	❑	❑	❑
3	Is the distance between walk-through-stirups at least 2/3 of the total length of the workplatform?	❑	❑	❑
4	Is an eventual cantilevered section of workplatform no more than allowed by the manufacturer?	❑	❑	❑
5	Have the hoists been mounted correctly?	❑	❑	❑
6	Is it demonstrable that the installation has been inspected?	❑	❑	❑
7	Do the distances between the roof suspensions and stirrups equal (parallel suspension ropes)?	❑	❑	❑
8	Is the space between the facade and the suspension points sufficient?	❑	❑	❑
9	Has the right number of counter weights been applied and secured?	❑	❑	❑
10	Have measures been taken to avoid a too high concentration of load?	❑	❑	❑
11	Are all wheels of the roof beams in locked position?	❑	❑	❑
12	Have eventual roof hooks been assembled correctly?	❑	❑	❑
13	Have eventual backward securities of roof hooks been assembled correctly?	❑	❑	❑
14	Are these backward securities located directly behind the roof hooks?`	❑	❑	❑
15	Does the electrical supply originate from an earthed power point?	❑	❑	❑
16	Is the used fuse at least 16 ampere?	❑	❑	❑
17	Do the used power cables have the right size diameter?	❑	❑	❑
18	Has the strain relief(s) of the power cable(s) been mounted correctly?	❑	❑	❑
19	Are the power cables free of any visible damage?	❑	❑	❑
20	Are the steel cables free of any visible damage?	❑	❑	❑
21	Have the striker plates been mounted minimal 10 cm below the talurit clamp?	❑	❑	❑
22	Have the ballastweights been mounted on the wire ropes at 20 cm above ground?	❑	❑	❑
23	Do all controlfunctions of the central control box work?	❑	❑	❑
24	Does the load bearing capacity remain below the maximum indicated capacity on the textplate?	❑	❑	❑
25	Does the top limit switches function?	❑	❑	❑
26	Has the emergency lowering function been tested on good function?	❑	❑	❑
27	Is the emergency descent wheel present?	❑	❑	❑
28	Does the fall-arrest device function?	❑	❑	❑
29	Are the required certificates present or immediately withdrawable?	❑	❑	❑
30	Is the manual present?	❑	❑	❑
31	Have precautions been taken to protect bystanders from danger?	❑	❑	❑
32	Does the windforce on the working location stay below windforce 6Beaufort (13,8m/s)?	❑	❑	❑
33	CE-execution: do overload limiter / mercury switch / slack rope safety device function?	❑	❑	❑
34	Is the connection of the stirrup to the hoist free from corrosion?	❑	❑	❑

For noted short comings you should cross “NO”, so these can be taken care of.
Finally the checklist should be sign of.

NOTE! The MHB should not be used if the short comings have not been resolved.